OWNER'S MANUAL





TRUXEDO®

PICKUP BED COVER

P.O. Box 1078, 2209 Kellen Gross Dr., Yankton SD 57078
Phone: 1-877-TRUXEDO (1-877-878-9336) Fax: (605) 664-9304
Web Site : http://www.truxedo.com

TruXedo® is a registered United States trademark Patents #6,568,740 & 6,575,520

P/N 1113667 Rev T

LIFETIME WARRANTY

TruXedo warrants that all new, unused products are free from defects in material and workmanship. This Warranty is effective if the product is properly installed and used for the purpose intended for the life of the product. It applies to the original buyer only. TruXedo's obligation under this Warranty is limited to repairing, or at its option, replacing any part that is returned, transportation prepaid, to TruXedo, Yankton, South Dakota, if the product is, in our judgment, defective. All materials must be accompanied by an RMA (Returned Material Authorization) number requested by and authorized in advance of returning the materials. TruXedo shall not be liable or responsible to supply or pay labor to replace any part found defective, nor shall it be liable for any damages of any kind or nature to person, product, or property.

There are no Warranties for used products or products that have been repaired, altered, modified, subjected to misuse, negligence, accident or ordinary wear and tear. Limitations may apply to logo screen printing. Call 1-877-878-9336 for complete details.

TruXedo products are sold without any express warranty except as set forth above. TruXedo is not obligated to honor warranty claims if Genuine TruXedo parts are not utilized.

DIRECT ALL WARRANTY CLAIMS TO TRUXEDO AT 1-877-878-9336

Register online at www.truxedo.com or mail this form to:
TruXedo, P.O. Box 1078, Yankton, SD 57078-1078

Name:_____
Address:_____
City:_____State:_____Zip:_____
Phone Number:_____
Email Address:_____
Date Purchased: _____ Price Paid: _____
Dealer Name:_____
Pickup Make: _____
Model: _____ Year: _____

Product Purchased:
- ◯ Original TruXedo
- ◯ TruXedo Lo Pro QT
- ◯ TruXedoPlus
- ◯ TruXport
- ◯ Deuce

OWNER/USER RESPONSIBILITIES

It is the responsibility of the owner/user to read this manual & comply with the operating procedures. The owner/user is also responsible for inspecting the TruXedo® cover, and for having parts repaired or replaced when worn or damaged.

Failure to follow safety instructions and warning labels could result in failure of your cover system and/or personal injury.

MESSAGES TO INSTALLER

- Always wear safety glasses and/or other necessary protective equipment when installing your TruXedo®.
- These instructions are complete for most pickup models. Additional instructions are included, if required for your truck. Please read entire manual before installing your TruXedo®.

COVER MAINTENANCE

Vinyl cover can be hand washed with mild soap and water or cleaned in a car wash. Thoroughly rinse cover to remove any soap residue. Cover can be treated with any vinyl protectant made for tonneau covers. Never use silicon, petroleum, or citrus based products on your tonneau cover.

SAFETY INSTRUCTIONS

1. **Do not place objects on or against cover or framework.**
2. **Do not tie cargo to TruXedo framework.**
3. **<u>Never</u> allow children or pets to occupy pickup box while cover is closed.**
4. **Cover is not airtight. Special care is required to keep cargo clean and dry.**
5. **Fabric cover won't prevent theft of contents inside truck box.**
6. **Cover must be rolled fully open and secured with safety straps when towing vehicle backwards.**

SIDE RAIL AND COVER INSTALLATION

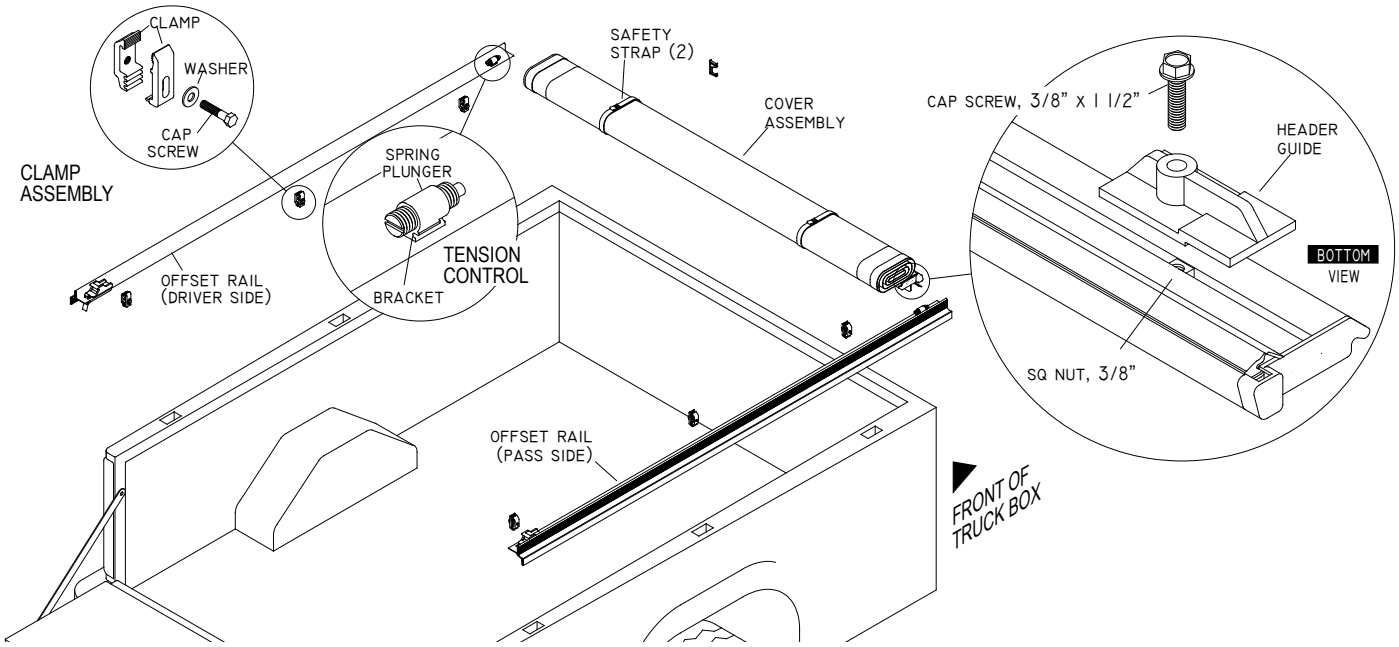

STEP 1: Place side rails against front of truck box, flush with box rail and level with each other. Starting at tailgate, evenly space 3 clamps along each side rail, leaving approx. 8" on each end.

NOTE: Bedliners may need to be trimmed to allow side rails to rest against front of truck box.

NOTE: High Bed Caps - It may be necessary to adjust side rail height to get a good seal at front and back of cover.

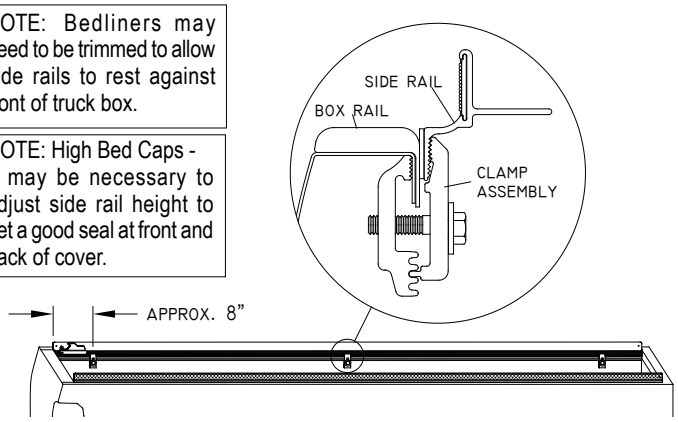

⚠ WARNING **Tighten clamps securely on side rails before driving vehicle**

STEP 2: For optimum latching performance and cover fit, side rails must be level. To adjust rails, loosen screws and reposition male clamps higher or lower. Tighten all clamps.

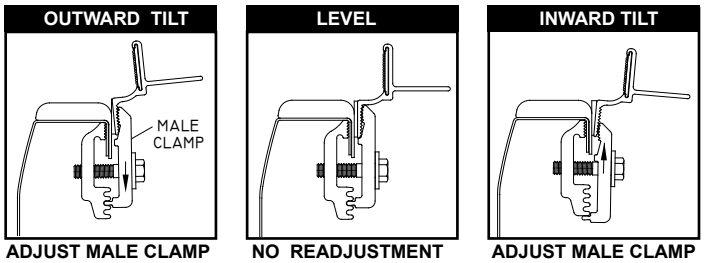

ADJUST MALE CLAMP LOWER | **NO READJUSTMENT REQUIRED** | **ADJUST MALE CLAMP HIGHER**

NOTE: Clamp configurations shown are for reference only, and are not intended to be standard for all pickups.

STEP 3: Install header guides into front header with 3/8" x 1 1/2" cap screws and 3/8" square nuts as shown. Nuts have been pre-installed into slot in header guide. Finger tighten.

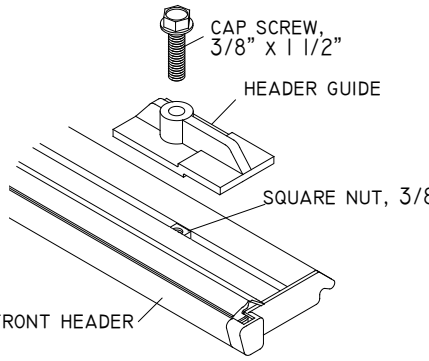

STEP 4: Set cover assembly behind cab with header seal tucked inside the pickup box, OR install seal on top of rail to simplify installation.

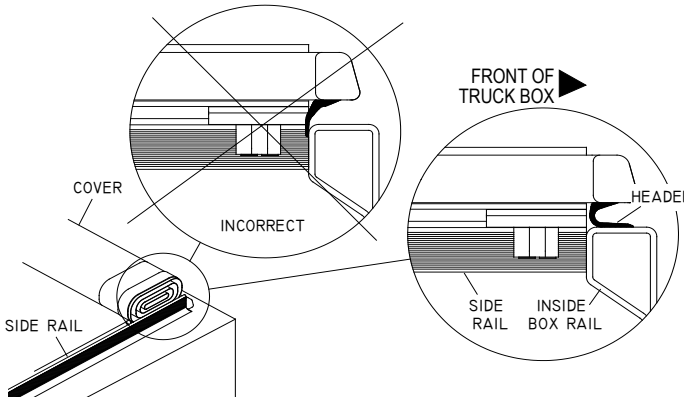

STEP 5: Slide header guides into side rail flanges on each side of header. Tighten bolts securely.

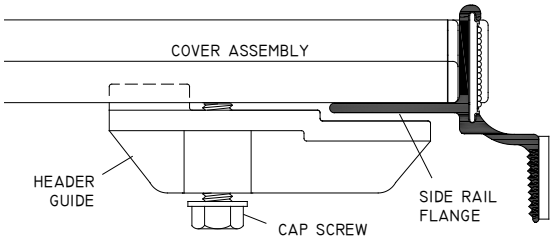

LATCHING & UNLATCHING COVER

STEP 6: Unroll cover toward tailgate and rest bows on side rails. Rotate header into header stops and press down to lock toggle into header.

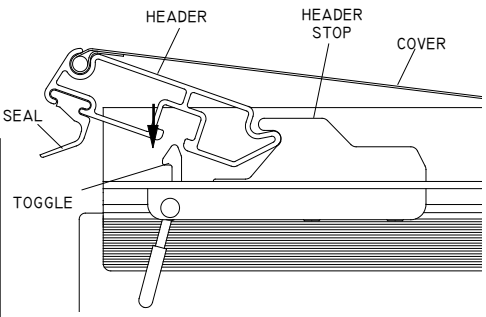

NOTE: If tailgate has a key lock, TruXedo® is secured until tailgate is unlocked and opened.

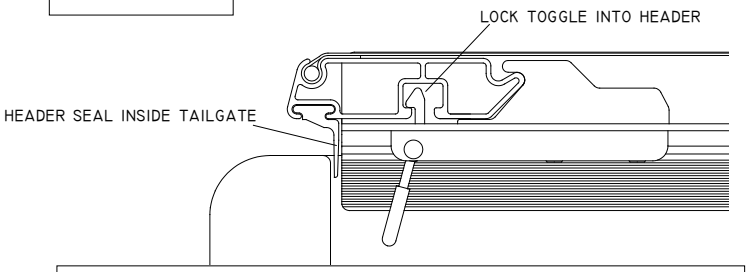

NOTE: In cold weather conditions or with some accessories, it may be preferable to close the cover before closing the tailgate.

STEP 7: Pull cover over rails and press edges into Shur-Bond™ VELCRO® brand fastening system on side rails.

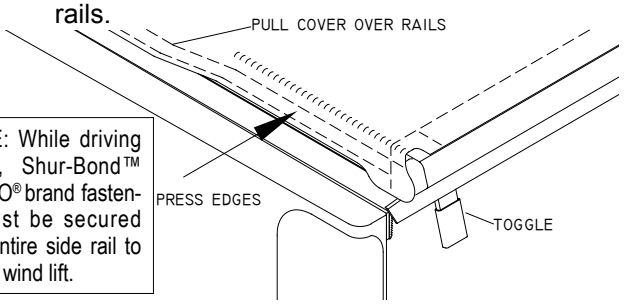

NOTE: While driving vehicle, Shur-Bond™ VELCRO® brand fasteners must be secured along entire side rail to prevent wind lift.

STEP 8: To release cover, pull back on toggle. Roll cover toward cab to open. <u>For best results, leave cover fastened to side rails while opening.</u>

STEP 9: Secure cover open by buckling safety straps tightly.

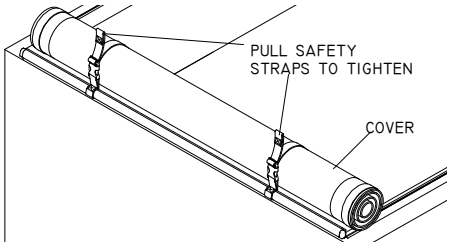

COVER TENSION ADJUSTMENT

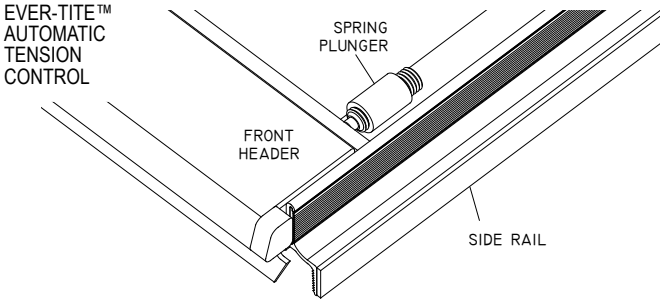

- Spring plunger compensates for material expansion & contraction caused by temperature changes.
- Check cover tension after installation, seasonally, & after extreme temperature changes.
- For best performance, adjust tension regularly to protect your cover against wind wear.

STEP 10: Set tension during **warmest part of day.** With cover closed, release VELCRO® brand fasteners from both side rails near cab. Check compression of both spring plungers against the front header per diagram. Roll cover open and make adjustments. Close cover and recheck adjustment. Repeat until satisfactory tension has been achieved.

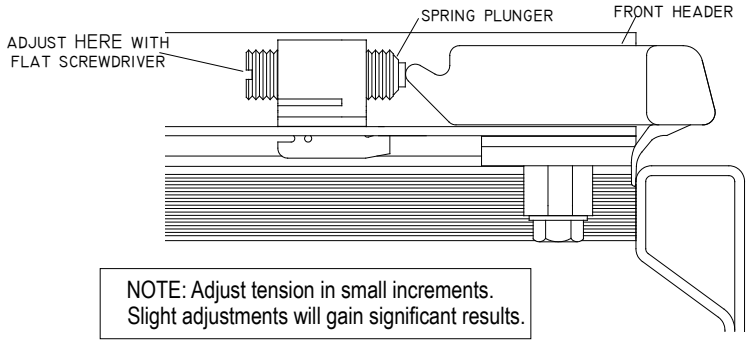

NOTE: Adjust tension in small increments. Slight adjustments will gain significant results.

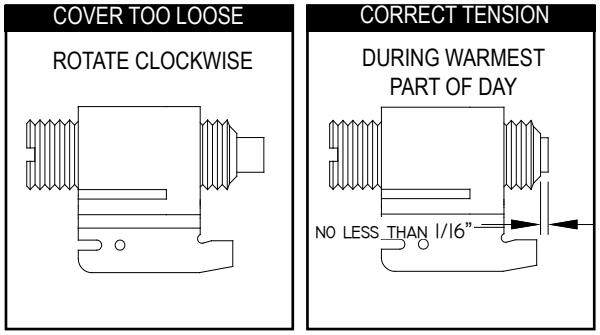

TROUBLE SHOOTING

<u>HEADER WILL NOT LATCH:</u>
Check side rails to make sure they are level. See Step 2.
Make sure the header seal is not caught between side rail & header.
Check position of side rails on pickup box, they may be positioned too low. See Step 1.

<u>FABRIC COVER IS TOO TIGHT OR TOO LOOSE:</u> See Step 10 to adjust tension.

<u>REAR HEADER SEAL IS NOT INSIDE TAILGATE WHEN COVER IS CLOSED:</u>
Press header seal, while running hand across entire length of seal to train. See Step 6.

*VELCRO® is a registered trademark of the Velcro companies.

Questions?
Call our friendly customer service staff at TruXedo, Inc. Toll Free:
1-877-878-9336
Mon - Fri 8 am - 5 pm CT

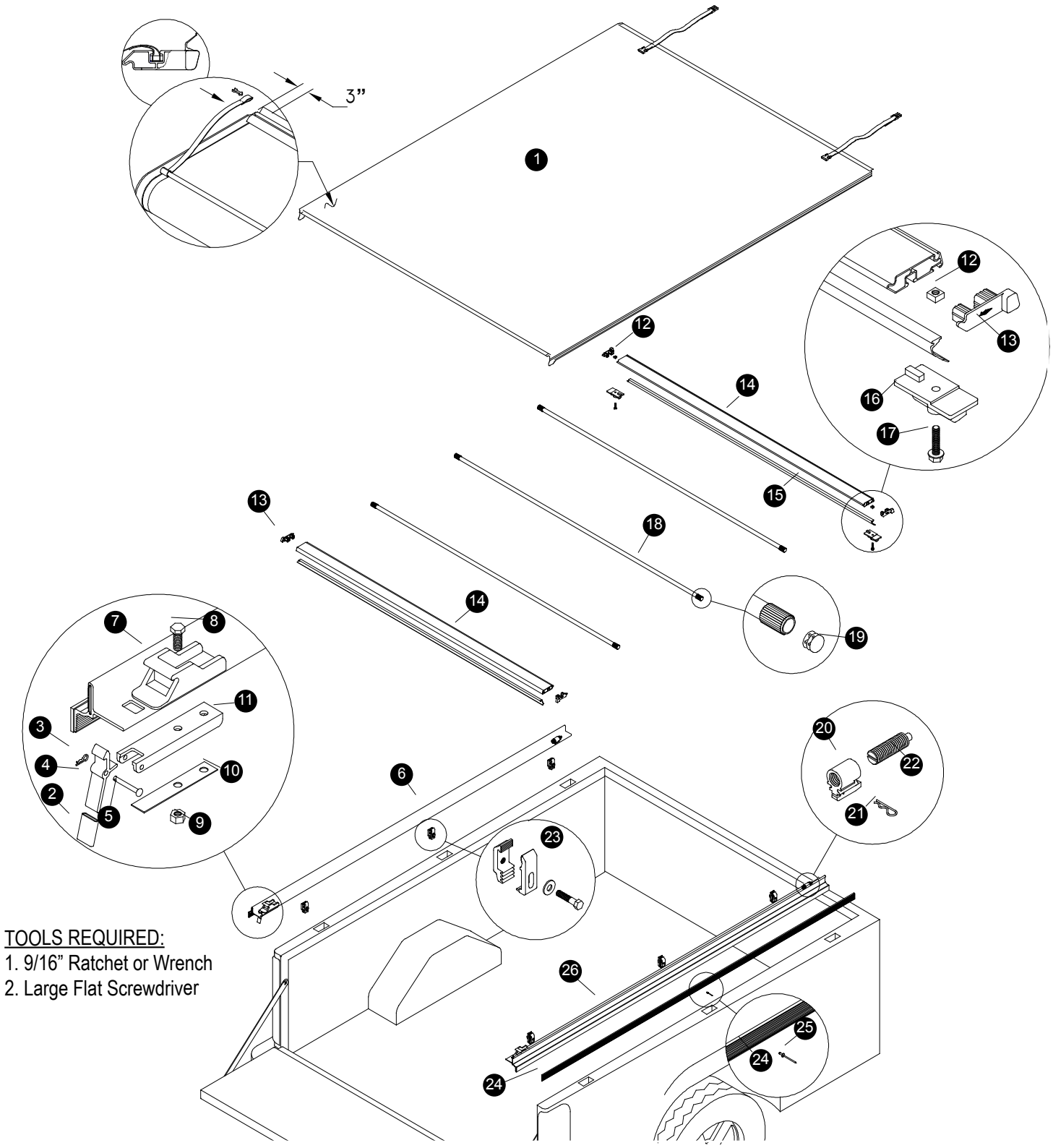

TOOLS REQUIRED:
1. 9/16” Ratchet or Wrench
2. Large Flat Screwdriver

TRUXEDO REPLACEMENT PARTS

1	*	TruXedo Replacement Cover
2	1703265	Toggle Cap
3	1702611	Cotter Pin
4	1114888	Toggle 2003
5	1702610	Clevis Pin
6	*	Driver Side Rail Assembly
7	1702801	Header Stop
8	1702926	Hex Cap Screw, 5/16” x 7/8”
9	1700419	Nylon Lock Hex Nut, 5/16”
10	1114773	Flat Spring
11	1703650	Latch Maine Frame
12	1702602	Square Nut, 3/8”
13	1113793	Header End Plugs (Set of Two)
14	*	Black Header
15	*	Notched Header Seal
16	1114872	Header Guide
17	1703000	Hex Flange Cap Screw, 3/8” x 1 1/2”
18	*	Bow Assembly
19	1701595	End Plug
20	1703260	Tension Control Bracket
21	1703332	Hitch Pin, 1/16” x 1 5/15”
22	1702992	Spring Plunger
23	*	Clamp Hardware
24	*	Shur-Bond™ VELCRO® Fastening System
25	1702826	Pop Rivet
26	*	Passenger Side Rail Assembly

*Please supply make & model of truck or length required