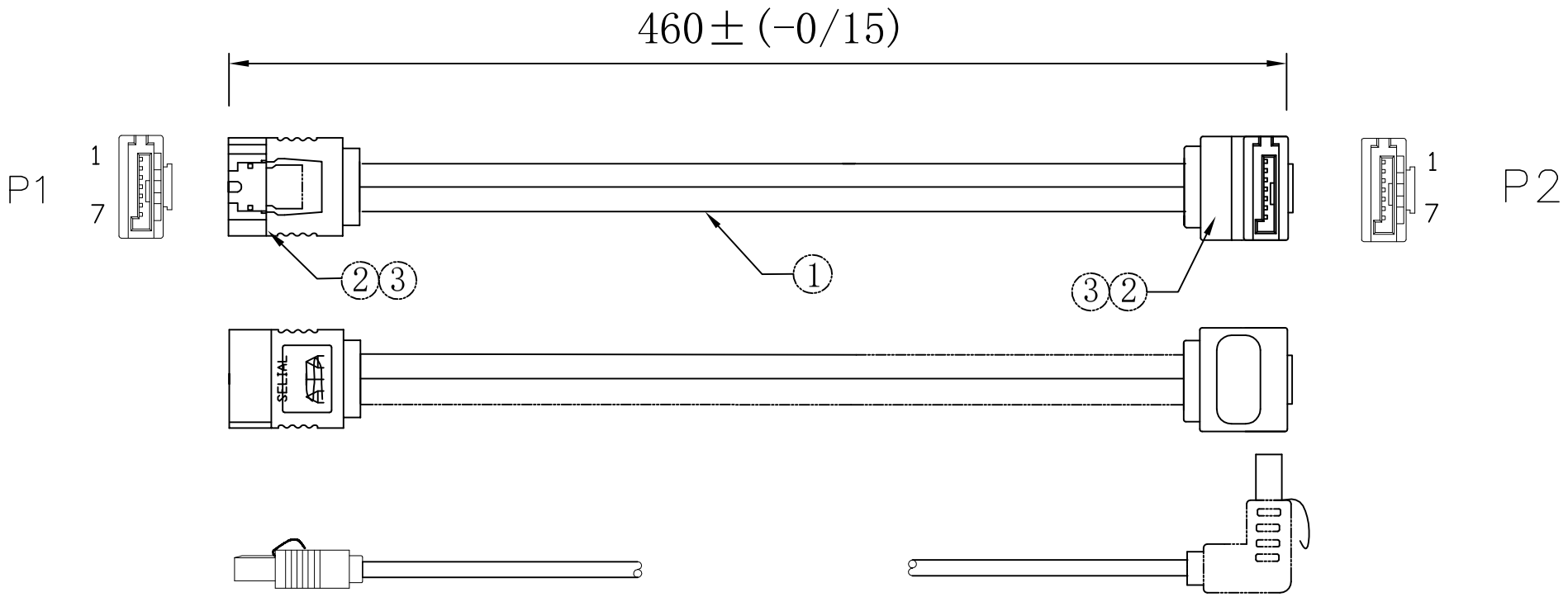

ELECTRICAL PROPERTIES

1. 100% OPEN SHORT MIS-WIRE TEST
2. CONTACT RESISTANCE 3 OHM MAX
3. INSULATION RESISTANCE 10 MEGA OHM MIN
4. HIPOT TEST DC 300V 10MS

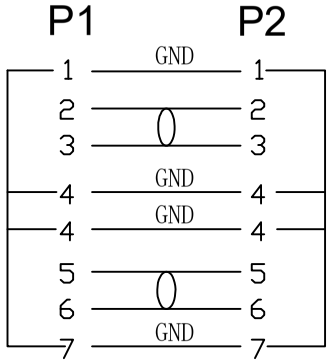

				Relper-LINESO				
③	MOLD 45P PVC COLOR:BLACK (ROHS)	12	G					
②	SATA7P FEMALE GOLD G/F,INSULATOR:BLACK	2	PCS	APP'D		REV: A/0	UNIT: MM	SCALE:1/1
①	UL2725 26AWG*2C*2+AL+4D OD:2.2*7.8mm BLUE(ROHS)	1	PCS	DRAW	Jackson	PART NUMBER		
NO	DESCRIPTION	QTY	UNIT	DATE	SEP-17-2015	NAME	SATA7P F/180° TO SATA7P F/90° L=460mm	