Premium Style. Lasting Performance.

Genesis™ and Genesis Elite™ Roll Up Tonneau Cover

For proper installation and best possible fit, please read all instructions BEFORE you begin.

Important Safety Information

- **Please read this manual and follow its instructions carefully. To emphasize special information, the symbol ⚠ and the words WARNING, CAUTION and NOTE have special meanings. These special meanings apply except when laws or regulations require that the signal words be used with a different meaning.**
- **Serious personal injury and property damage can occur if vehicle is driven without both black buckles at the front of cover fastened when cover is rolled / stowed at front of bed.**
- **Do not use release cables as handles.**
- **Do not pull on release cables to enter truck bed.**
- **Do not use any part of this tonneau as a tie down.**

Contents

NOTE: Actual product may vary from illustration.

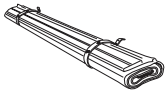

A **Cover Assembly**

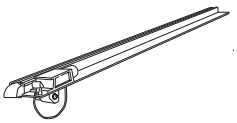

B **Driver Side Rail**

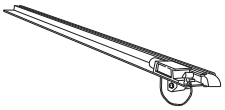

C **Passenger Side Rail**

D **2X Flange Nut**

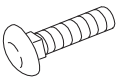

E **2X Carriage Bolt**

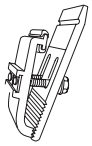

F **6X Clamp Assembly**

Tools Required

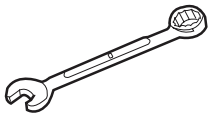

7/16” Combination Wrench

7/16” Socket

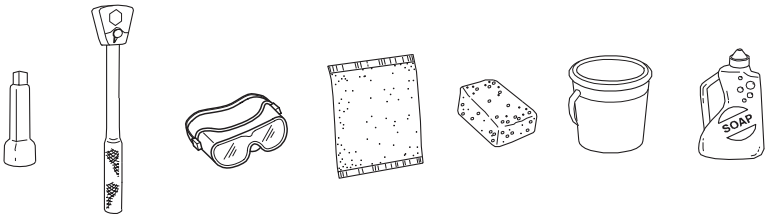

Preparation Before Installation

- Wash the upper rail surfaces of the truck bed.
- Be sure to completely dry the washed surfaces before installing the tonneau cover.

Installation Steps

NOTE: Actual application may vary slightly from illustrations.

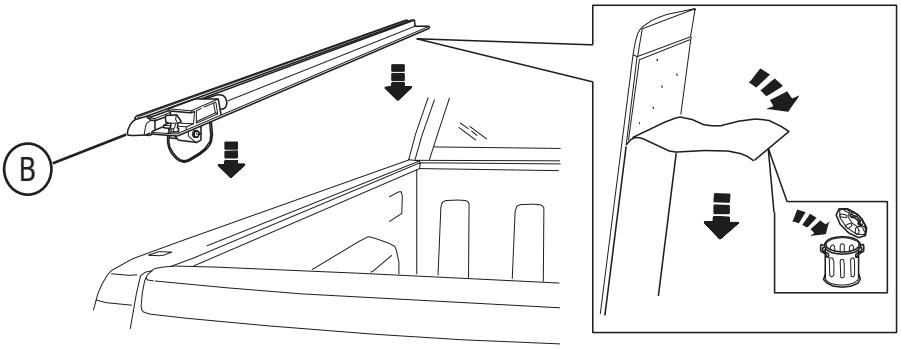

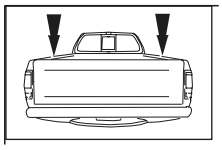

Remove the white backing from the foam on the front and side rails. It will be necessary to release the buckles on the front rail to do this but do not unroll the cover. Re-fasten the buckles once the foam backing is removed. With the tailgate closed, lay the ends of the driver side rail on the truck bed bulkhead and tailgate. The latches are positioned toward the rear and the foamed side of the rail faces the inner side wall of the truck bed.

1

The rear clamp needs to be positioned as far back as possible while the front clamp needs to positioned as far forward as possible. The middle clamp should be centered as best as the truck bed will allow. Proceed to step 5 and install the rear clamp first, the front clamp second and the middle clamp last.

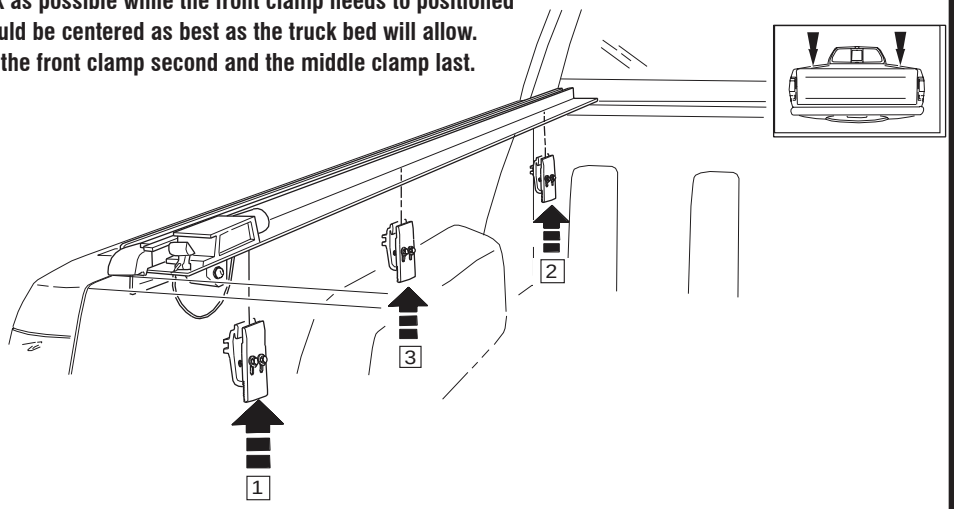

2

Installation Steps

NOTE: Actual application may vary slightly from illustrations.

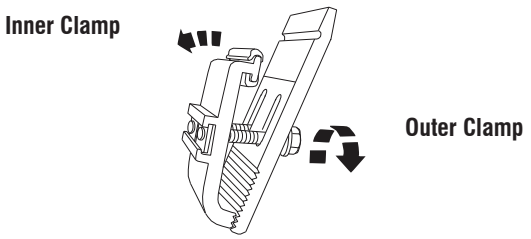

Loosen all clamp bolts as far as possible without allowing the assemblies to completely seperate.

3

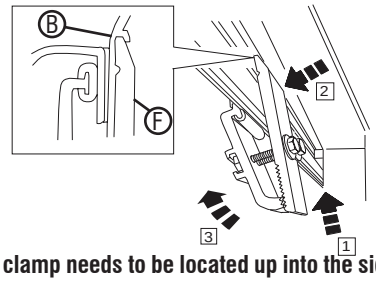

The upper tip of the outer clamp needs to be located up into the side rail and rotated out until the outer clamp and the side rail mate together as shown.

4

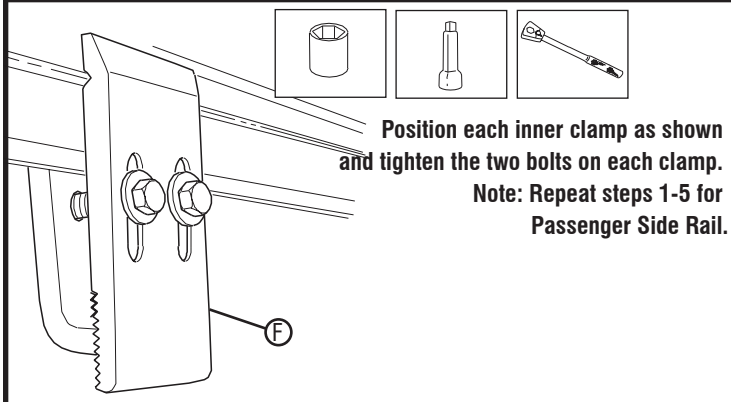

Position each inner clamp as shown and tighten the two bolts on each clamp.
Note: Repeat steps 1-5 for Passenger Side Rail.

5

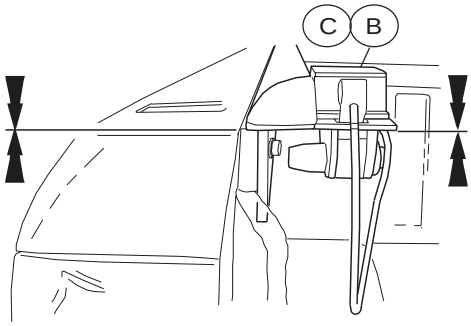

Open the tailgate and make sure the driver and passenger side rails are horizontal as shown. If they are not, proceed to step 7, otherwise proceed to step 8.

6

If
Si
Si

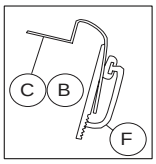

Then

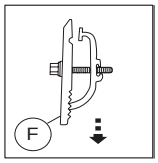

Re-position all inner clamps downward.

If
Si
Si

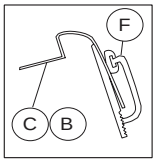

Then

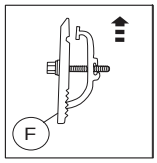

Re-position all inner clamps upward.

Repeat until both side rails are horizontal as shown in step 6. Note: Make sure tail gate is closed for this adjustment.

7

Installation Steps

NOTE: Actual application may vary slightly from illustrations.

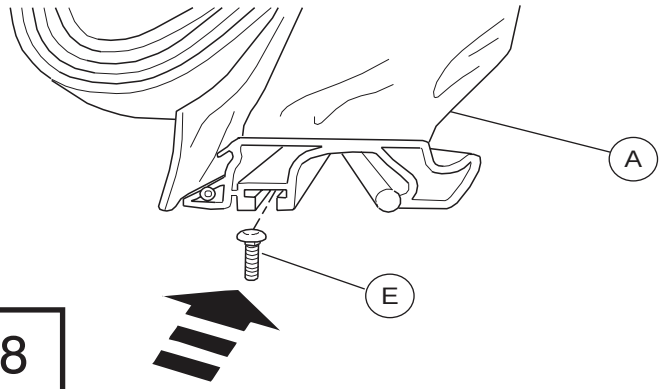

Slide one carriage bolt approx 1/2” into the t-slot at each end of the front rail as shown.

8

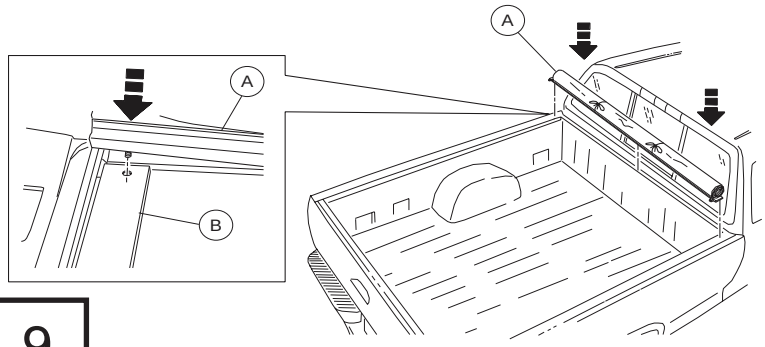

Set the cover assembly in place as shown.

9

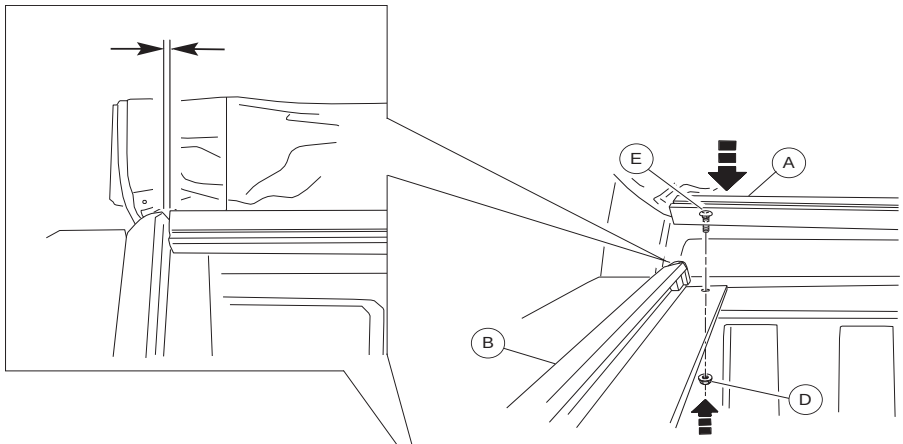

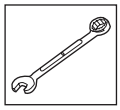

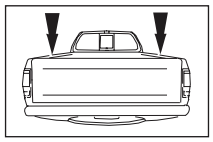

Loosely install the flange nuts as shown. Position the front rail so the gaps at each end of the front rail are equal.Tighten both flange nuts.

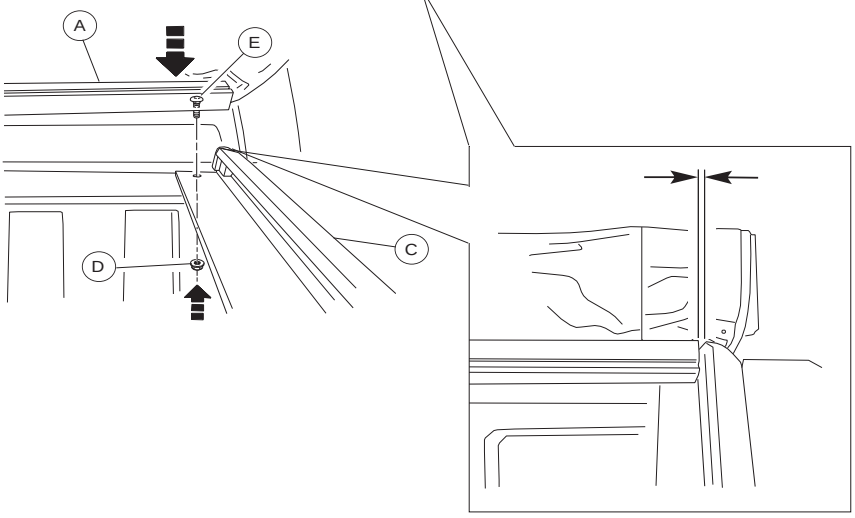

10

Installation Steps

NOTE: Actual application may vary slightly from illustrations.

Release the buckles and unroll the cover. Do not apply pressure to the Velcro at this time.

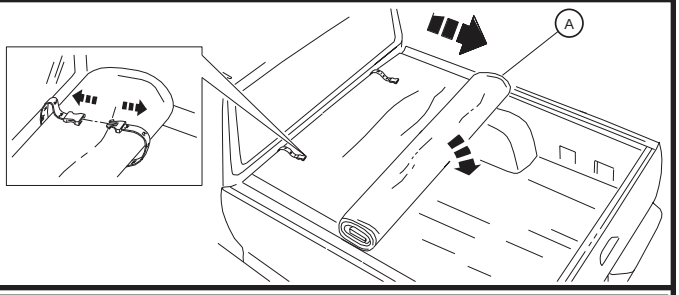

11

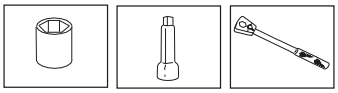

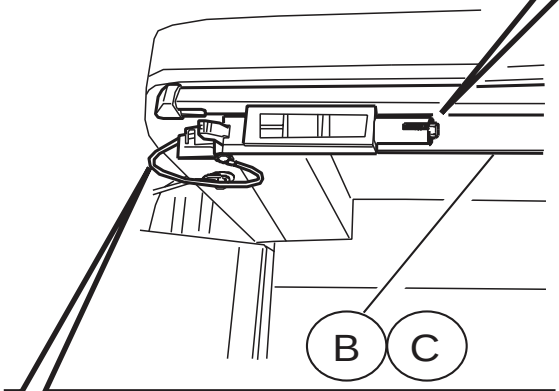

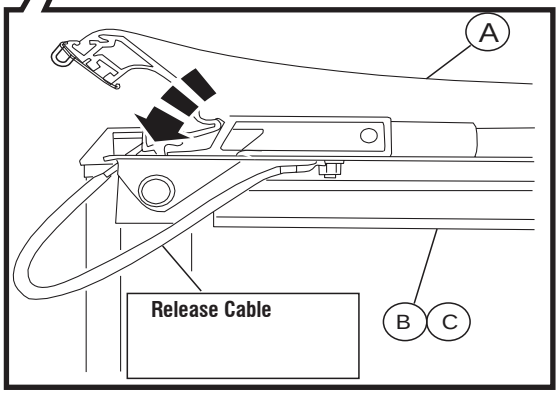

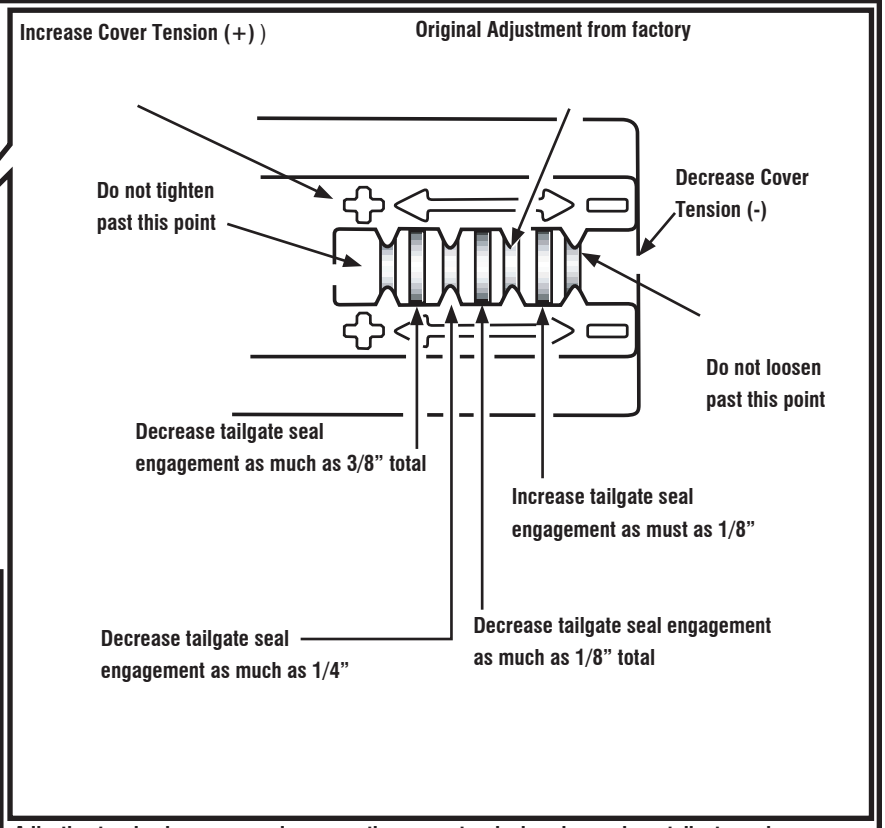

Adjusting tension increases or decreases the proper tensioning shown above tailgate seal engagement.

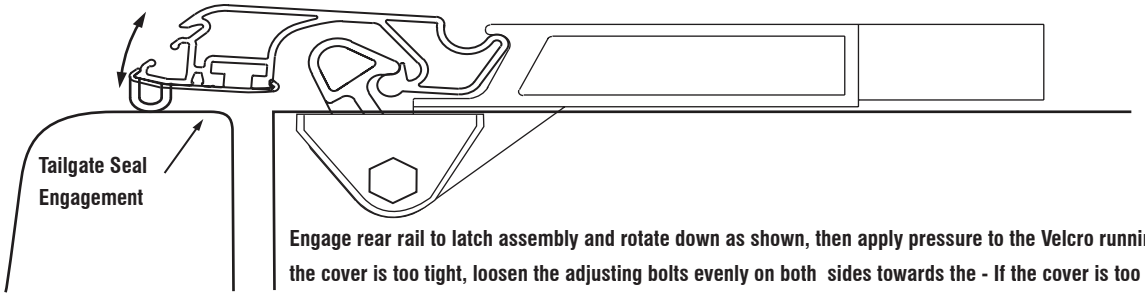

Engage rear rail to latch assembly and rotate down as shown, then apply pressure to the Velcro running the length of the rails. If the cover is too tight, loosen the adjusting bolts evenly on both sides towards the - If the cover is too loose, tighten the adjusting bolts evently on both sides towards the + Note: Proper cover tension is achieved when the rear rail requires moderate pressure to fully latch. To access the truck bed, pull both release cables and roll cover forward. Fasten buckle straps to stow cover.

12

Inspection After Installation

- **After installation is complete, confirm proper operation.**

Care and Cleaning

- **Wash only with mild soap & dry with a clean cloth.**
- **Avoid the use of automatic "brush-syle" car washes.**
- **Every 3 months or 5000 miles check the cover tension and all components for tightness. Refer to step 12 for cover tension adjustment.**

Congratulations!

You have purchased one of the many quality Lund® branded products offered by Lund International, Inc. We take the utmost pride in our products and want you to enjoy years of satisfaction from your investment. We have made every effort to ensure that your product is top quality in terms of fit, durability, finish and ease of installation.