BUNN®

VPR
VPS

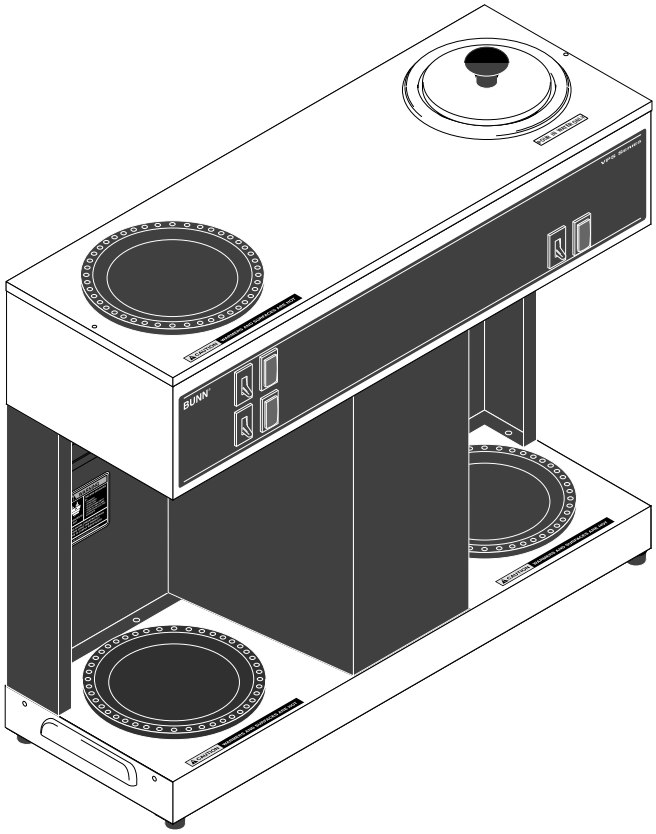

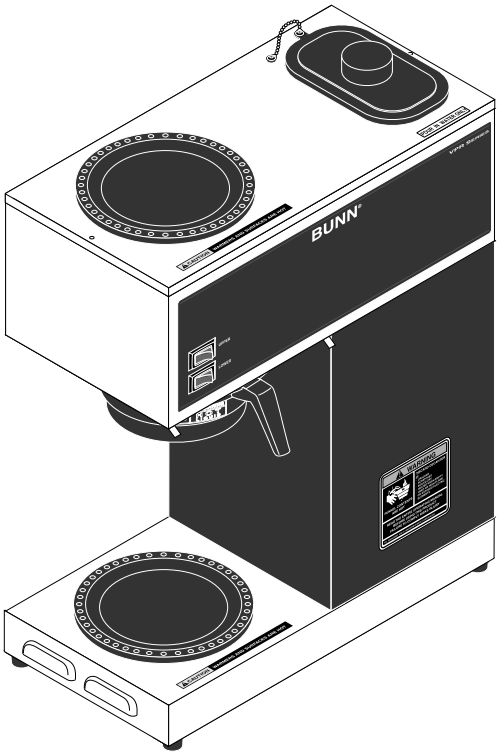

OPERATING & SERVICE MANUAL

BUNN-O-MATIC CORPORATION

POST OFFICE BOX 3227
SPRINGFIELD, ILLINOIS 62708-3227
PHONE: (217) 529-6601 FAX: (217) 529-6644

10053.0000J 07/01 ©1996 Bunn-O-Matic Corporation **www.bunnomatic.com**

INTRODUCTION

This equipment will brew a half-gallon batch of coffee into an awaiting dispenser. It is only for indoor use on a sturdy counter or shelf.

WARRANTY

Bunn-O-Matic Corp. ("Bunn") warrants the equipment manufactured by it to be commercially free from defects in material and workmanship existing at the time of manufacture and appearing within one year from the date of installation. In addition:

1.) Bunn warrants electronic circuit and/or control boards to be commercially free from defects in material and workmanship for three years from the date of installation.

2.) Bunn warrants the compressor on refrigeration equipment to be commercially free from defects in material and workmanship for two years from the date of installation.

3.) Bunn warrants that the grinding burrs on coffee grinding equipment will grind coffee to meet original factory screen sieve analysis for three years from date of installation or for 30,000 pounds of coffee, whichever comes first.

This warranty does not apply to any equipment, component or part that was not manufactured by Bunn or that, in Bunn's judgement, has been affected by misuse, neglect, alteration, improper installation or operation, improper maintenance or repair, damage or casualty.

THE FOREGOING WARRANTY IS EXCLUSIVE AND IS IN LIEU OF ANY OTHER WARRANTY, WRITTEN OR ORAL, EXPRESS OR IMPLIED, INCLUDING, BUT NOT LIMITED TO, ANY IMPLIED WARRANTY OF EITHER MERCHANTABILITY OR FITNESS FOR A PARTICULAR PURPOSE. The agents, dealers or employees of Bunn are not authorized to make modifications to this warranty or to make additional warranties that are binding on Bunn. Accordingly, statements by such individuals, whether oral or written, do not constitute warranties and should not be relied upon.

The Buyer shall give Bunn prompt notice of any claim to be made under this warranty by telephone at (217) 529-6601 or by writing to Post Office Box 3227, Springfield, Illinois, 62708-3227. If requested by Bunn, the Buyer shall ship the defective equipment prepaid to an authorized Bunn service location. If Bunn determines, in its sole discretion, that the equipment does not conform to the warranty, Bunn shall repair the equipment with no charge for parts during the warranty period and no charge for labor by a Bunn Authorized Service Representative during the warranty period. If Bunn determines that repair is not feasible, Bunn shall, at its sole option, replace the equipment or refund the purchase price for the equipment.

THE BUYER'S REMEDY AGAINST BUNN FOR THE BREACH OF ANY OBLIGATION ARISING OUT OF THE SALE OF THIS EQUIPMENT, WHETHER DERIVED FROM WARRANTY OR OTHERWISE, SHALL BE LIMITED, AS SPECIFIED HEREIN, TO REPAIR OR, AT BUNN'S SOLE OPTION, REPLACEMENT OR REFUND.

In no event shall Bunn be liable for any other damage or loss, including, but not limited to, lost profits, lost sales, loss of use of equipment, claims of Buyer's customers, cost of capital, cost of down time, cost of substitute equipment, facilities or services, or any other special, incidental or consequential damages.

USER NOTICES

Carefully read and follow all notices in this manual and on the equipment. All labels on the equipment should be kept in good condition. Replace any unreadable or damaged labels.

#00831.0000

⚠WARNING

- Fill water tank before turning -on thermostat or connecting appliance to power source.
- Use only on a properly protected circuit capable of the rated load.
- Electrically ground the chassis.
- Follow national/local electrical codes.
- Do not use near combustibles.

FAILURE TO COMPLY RISKS EQUIPMENT DAMAGE, FIRE, OR SHOCK HAZARD

READ THE ENTIRE OPERATING MANUAL BEFORE BUYING OR USING THIS PRODUCT

THIS APPLIANCE IS HEATED WHENEVER CONNECTED TO A POWER SOURCE

00831.0000F 3/98 © 1988 BUNN-O-MATIC CORPORATION

#00658.0000

⚠ WARNING

FUNNEL CONTENTS ARE HOT

DISCARD DECANTER IF:

- CRACKED
- SCRATCHED
- BOILED DRY
- HEATED WHEN EMPTY
- USED ON HIGH FLAME OR EXPOSED ELECTRIC ELEMENTS

READ THE ENTIRE OPERATING MANUAL BEFORE USING THIS PRODUCT FAILURE TO COMPLY RISKS INJURY

PN: 00658.0000F 6/98 © 1985 BUNN-O-MATIC CORPORATION

#12364.0000

⚠ CAUTION WARMERS AND SURFACES ARE HOT

#00833.0000

POUR IN WATER ONLY

ELECTRICAL REQUIREMENTS

CAUTION - The brewer must be disconnected from the power source until specified in *Initial Set-Up.*

The brewer has an attached cordset and requires 2-wire grounded service rated 120 volts ac, 15 amp, single phase, 60 Hz.

"A" models require 2-wire, grounded service rated 220 - 240 volts ac, 20 amp, single phase, 50 Hz. Proceed as follows:

Electrical Hook-Up (Model "A" Only)

CAUTION – Improper electrical installation will damage electronic components.

1. An electrician must provide electrical service as specified.
2. Using a voltmeter, check the voltage and color coding of each conductor at the electrical source.
3. Plug the power cord into the power connector located in the base on the rear of the brewer.

INITIAL SET-UP

CAUTION - The brewer must be disconnected from the power source throughout the initial set-up, except when specified in the instructions.

1. Insert an empty funnel into the funnel rails.
2. Place an empty dispenser under the funnel.
3. Pour three pitchers of tap water into the screened area on top of the brewer. Allow approximately two minutes between pitchers for water to flow into the tank. While the third pitcher of water is entering the tank, the tank will fill to capacity and the excess will flow from the sprayhead, out of the funnel, and into the dispenser.
4. When the flow of water from the funnel stops, connect the brewer to the power source and wait approximately twenty minutes for the water in the tank to heat to the proper temperature. Some water will drip from the funnel during this time; this is due to expansion and should not occur thereafter.
5. Pour one pitcher of tap water into the screened area on top of the brewer.
6. When water has stopped flowing from the funnel let the water in the tank reheat to the proper temperature.
7. Empty the dispenser. The brewer is now ready for use in accordance with the coffee brewing instructions below.

NOTE: The control thermostat will need to be adjusted downward to compensate for high altitudes. Refer to Steaming and spitting around the funnel on page 5 for instructions.

COFFEE BREWING

1. Insert a BUNN® filter into the funnel.
2. Pour the fresh coffee into the filter and level the bed of grounds by gently shaking.
3. Slide the funnel into the funnel rails.
4. Place an empty dispenser beneath the funnel.
5. Pour one pitcher of tap water into the screened area on top of the brewer.
6. When brewing is completed, simply discard the grounds and filter.

CLEANING

1. The use of a damp cloth rinsed in any mild, non-abrasive, liquid detergent is recommended for cleaning all surfaces on Bunn-O-Matic equipment.
2. Check and clean the sprayhead. The sprayhead holes must always remain open.
3. With the sprayhead removed, insert the deliming spring (provided) all the way into the sprayhead tube. When inserted properly, no more than two inches of spring should be visible. Saw back and forth five or six times.

NOTE – In hard water areas, this may need to be done daily. It will help prevent liming problems in the brewer and takes less than a minute.

TROUBLESHOOTING

A troubleshooting guide is provided to suggest probable causes and remedies for the most likely problems encountered. If the problem remains after exhausting the troubleshooting steps, contact the Bunn-O-Matic Technical Service Department.

- Inspection, testing, and repair of electrical equipment should be performed only by qualified service personnel.
- This brewer is heated at all times. Keep away from combustibles.

WARNING –
- Exercise extreme caution when servicing electrical equipment.
- Unplug the brewer when servicing, except when electrical tests are specified.
- Follow recommended service procedures
- Replace all protective shields or safety notices

PROBLEM	PROBABLE CAUSE	REMEDY
Water is not hot	1. Limit Thermostat or Thermal Cut-Off **CAUTION -** Do not eliminate or bypass limit thermostat/thermal cut-off. Use only BOM replacement part. Limit Thermostat - #29329.1000 Thermal Cut-off - #04776.0000	Refer to *Service* - Limit Thermostat or Thermal Cut-Off for testing procedures. See page 10 or 13
	2. Control Thermostat	Refer to *Service* - Control Thermostat for testing procedures. See page 9
	3. Tank Heater	Refer to *Service* - Tank Heater for testing procedures. See page 12
Spitting or excessive steaming	1. Lime Build-up **CAUTION -** Tank and tank components should be delimed regularly depending on local water conditions. Excessive mineral build-up on stainless steel surfaces can initiate corrosive reactions resulting in serious leaks.	Inspect the tank assembly for excessive lime deposits. Delime as required.
	2. Control Thermostat	Refer to *Service* - Control Thermostat for testing procedures. See page 9

TROUBLESHOOTING (cont.)

PROBLEM	PROBABLE CAUSE	REMEDY
Dripping from sprayhead	1. Lime Build-up **CAUTION -** Tank and tank components should be delimed regularly depending on local water conditions. Excessive mineral build-up on stainless steel surfaces can initiate corrosive reactions resulting in serious leaks.	Inspect the tank assembly for excessive lime deposits. Delime as required.
Beverage overflows dispenser	1. Dispenser	The dispenser must be completely empty before starting a brew cycle.
Weak beverage	1. Filter Type	BUNN® paper filters must be used for proper extraction.
	2. Coffee Grind	A fine or drip grind must be used for proper extraction.
	3. Sprayhead	A six-hole stainless steel sprayhead must be used for proper extraction.
	4. Funnel Loading	The BUNN® paper filter must be centered in the funnel and the bed of grounds leveled by gentle shaking.
	5. Water Temperature	Place an empty funnel on an empty dispenser beneath the sprayhead. Pour-in a pitcher of tap water and check the water temperature immediately below the sprayhead with a thermometer. The reading should not be less than 195°F. Adjust the control thermostat to increase the water temperature. Replace if necessary.

TROUBLESHOOTING (cont.)

PROBLEM	PROBABLE CAUSE	REMEDY
Dry coffee grounds remain in the funnel	1. Funnel Loading	The BUNN® paper filter must be centered in the funnel and the bed of grounds leveled by gently shaking.
Brewer is making unusal noises	1. Tank Heater	Remove and clean lime off the tank heater. See page 12
Cool beverage serving temperature	1. ON/OFF Warmer Switch	Refer to *Service* - ON/OFF Warmer Switch for testing procedures. See page 11
	2. Warmer Element(s)	Refer to *Service* - Warmer Element(s) for testing procedures. See page 14

SERVICE

This section provides procedures for testing and replacing various major components used in this brewer should service become necessary. Refer to *Troubleshooting* for assistance in determining the cause of any problem.

WARNING - Inspection, testing, and repair of electrical equipment should be performed only by qualified service personnel. The brewer should be disconnected from the power source when servicing, except when electrical tests are required and the test procedure specifically states to plug-in the brewer.

COMPONENT ACCESS

WARNING - Disconnect the brewer from the power source before the removal of any panel or the replacement of any component.

All components are accessible by the removal of the top cover, fill basin and warmer assemblies.

The top cover is attached with two #4-40 screws.

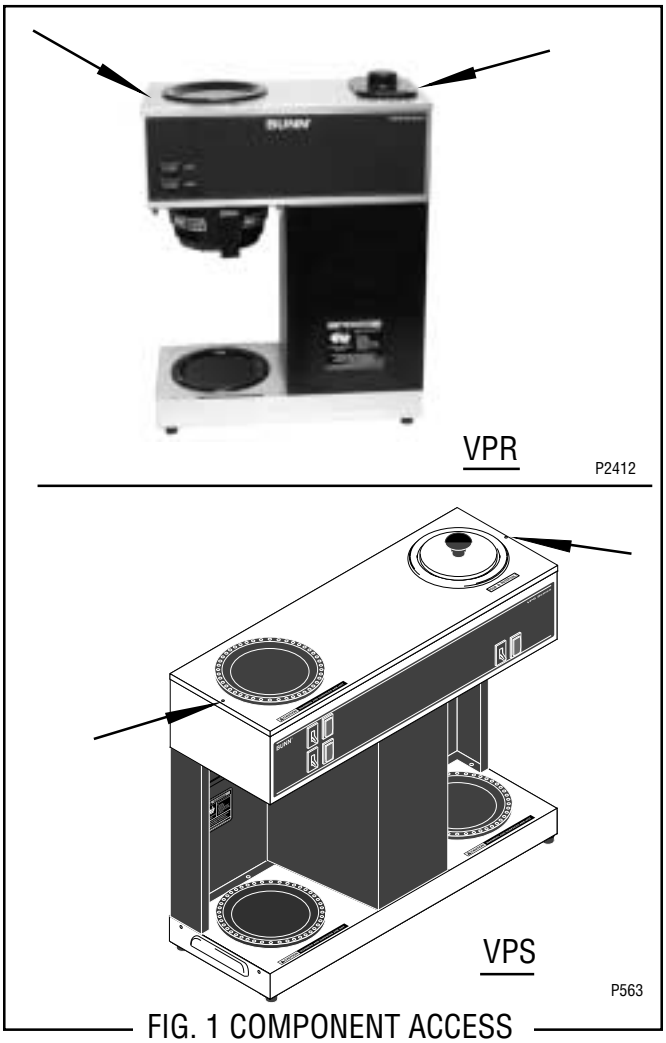

FIG. 1 COMPONENT ACCESS

The tank inlet fitting secures the fill basin to the tank lid.

FIG. 2 FILL BASIN REMOVAL

Contents

Control Thermostat 9
Limit Thermostat (VPR - VPS) 10
ON/OFF Switch (Warmers) 11
Tank Heater 12
Thermal Cut-Off (VPRA - VPSA) 13
Warmer Elements 14
Wiring Diagrams ..... 15 & 16

SERVICE (cont.)

CONTROL THERMOSTAT

FIG. 3 CONTROL THERMOSTAT

Location:

The control thermostat is located inside the hood on the left end of the mounting bracket.

Test Procedures:

1. Disconnect the brewer from the power source.
2. Locate the black wire on the control thermostat.
3. Check the voltage across the black wire on the control thermostat and the white wire on the tank heater or the red wire on the tank heater with a voltmeter. Plug-in the brewer to the power source. The indication must be:
   a) 120 volts ac for two wire 120 volt models.
   b) 220 volts ac for two wire 220 volt models.
4. Disconnect the brewer from the power source.

If voltage is present as described, proceed to #5.
If voltage is not present as described, refer to the wiring diagrams and check the brewer wiring harness.

5. Locate the blue/black wire on the control thermostat.
6. Gently remove the capillary bulb and grommet from the tank.
7. Check the voltage across the blue/black wire of the control thermostat and the white wire on the tank heater or red wire on the tank heater with a voltmeter when the control thermostat is turned "ON" (fully counterclockwise for thermostat with tee handle control or fully clockwise for thermostats with control knob). Plug-in the brewer to the power source. The indication must be:
   a) 120 volts ac for two wire 120 volt models.
   b) 220 volts ac for two wire 220 volt models.

Voltage must not be present across these terminals when the thermostat is turned "OFF" (fully counterclockwise).

8. Disconnect the brewer from the power source.

If voltage is present as described, reinstall the capillary tube into the tank to the line 4.5" above the bulb, the control thermostat is operating properly.
If voltage is not present as described, replace the thermostat.

Removal and Replacement:

1. Remove wires from control thermostat leads or terminals.

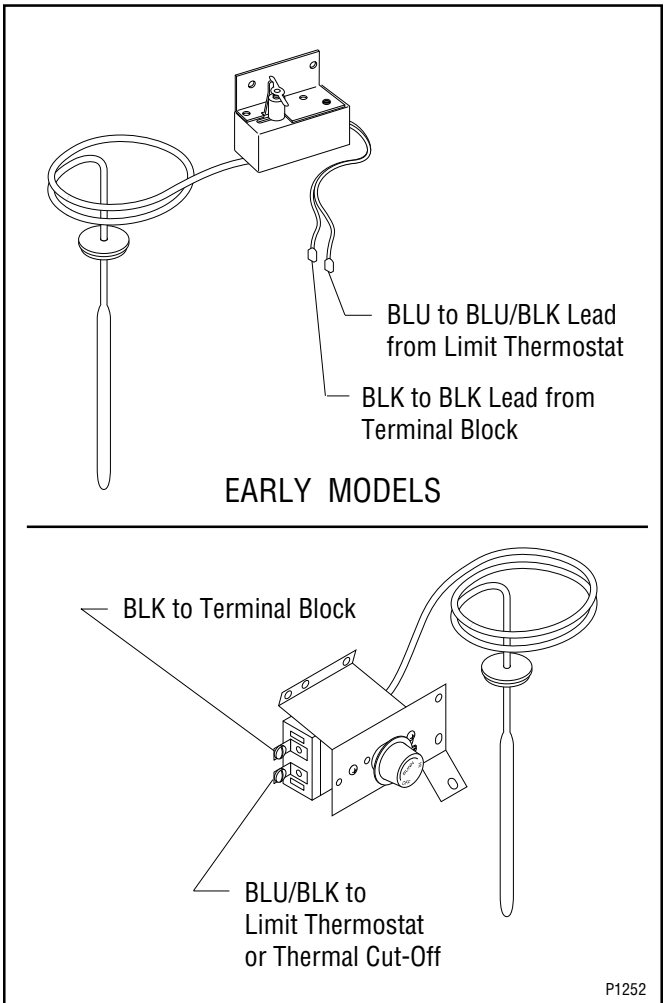

FIG.4 CONTROL THERMOSTAT TERMINALS

SERVICE (cont.)

CONTROL THERMOSTAT (cont.)

2. Remove the thermostat capillary bulb by firmly pulling-up on the capillary at the tank lid. This will disengage the grommet from the tank lid.
3. Remove the two #8-32 screws securing the control thermostat to the mounting bracket inside the hood.
4. Slide the grommet to the line 4.5" above the bulb on the new capillary tube.
5. Insert the capillary bulb through the hole in the tank lid and press the grommet firmly and evenly so that the groove in the grommet fits into the tank lid.
6. Carefully bend the capillary tube so that the tube and bulb inside the tank are in the vertical position.

NOTE - The capillary tube must be clear of any electrical termination and not kinked.

7. Using two #8-32 screws secure the control thermostat to the mounting bracket inside the hood.
8. Refer to Fig. 4 when reconnecting the wires.
9. Adjust the control thermostat as required

LIMIT THERMOSTAT - VPR, VPS

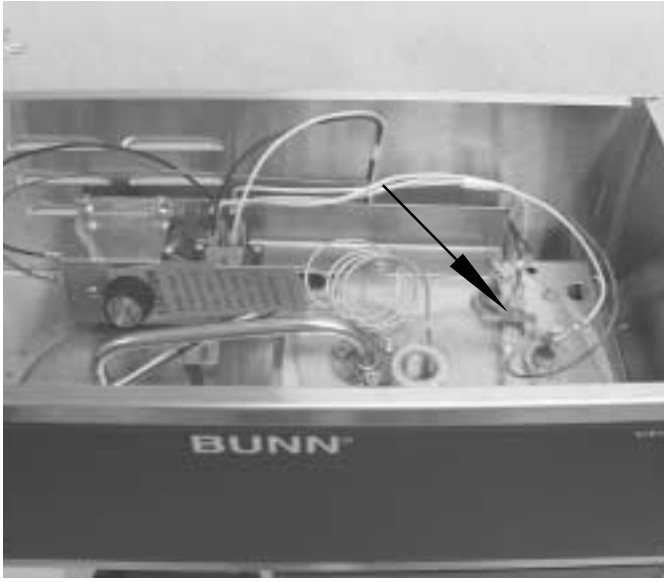

P2414

FIG. 5 LIMIT THERMOSTAT

Location:

The limit thermostat is located inside the hood on the right side of the tank lid.

Test Procedures:

1. Disconnect the brewer from the power source.
2. Disconnect the blue/black and black wires from the limit thermostat.
3. Check for continuity across the limit thermostat terminals with an ohmmeter.

If continuity is present as described, the limit thermostat is operating properly.

If continuity is not present as described, replace the limit thermostat.

Removal and Replacement:

1. Remove all wires from limit thermostat terminals.
2. Carefully slide the limit thermostat out from under the retaining clip and remove limit thermostat.
3. Carefully slide the new limit thermostat into the retaining clip.
4. Refer to Fig. 6 when reconnecting the wires.

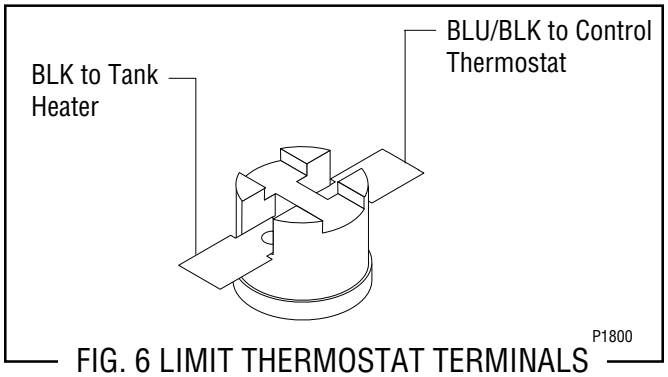

FIG. 6 LIMIT THERMOSTAT TERMINALS

SERVICE (cont.)

ON/OFF WARMER SWITCH

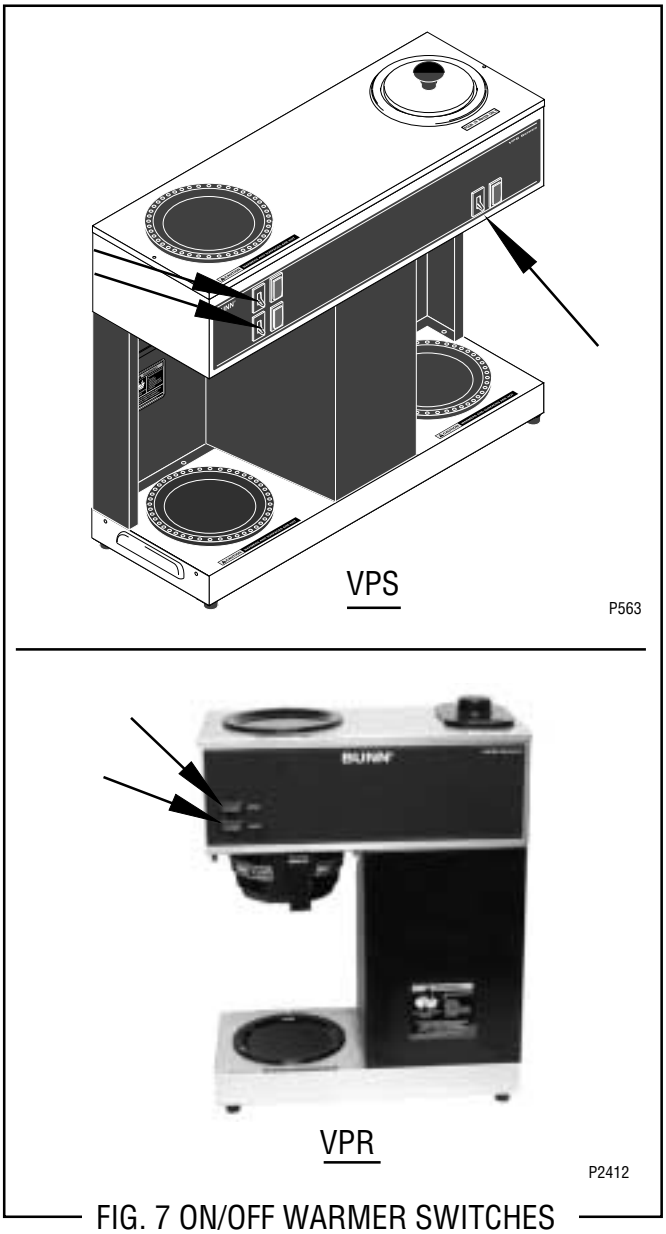

FIG. 7 ON/OFF WARMER SWITCHES

Location:

The ON/OFF warmer switches are located on the front of the hood.

Test Procedure:

1. Disconnect the brewer from the power source.
2. Viewing the switch from the back locate the black wire from the switch terminal.
3. With the switch in the "ON" position check the voltage across the black wire of the switch and the white wire on the lamp or red wire on the lamp with a voltmeter. Plug-in the brewer to the power source. The indication must be:
   a) 120 volts ac for two wire 120 volt models.
   b) 220 volts ac for two wire 220 volt models.
4. Disconnect the brewer from the power source.

If voltage is present as described, proceed to #5.
If voltage is not present as described, refer to the *Wiring Diagrams* and check the brewer wiring harness.

5. Remove both wires from the switch and check for continuity across the terminals with the switch in the "ON" position. Continuity must not be present when the switch is in the "OFF" position.

If continuity is present as described, reconnect the wires to the terminals.
If continuity is not present as described, replace the switch.

Removal and Replacement:

1. Remove the wires from the switch terminals.
2. Compress the clips inside the hood and gently push the switch through the opening.
3. Push the new switch into the opening and spread the clips to hold switch in the hood.
4. Refer to Fig. 8 when reconnecting the wires

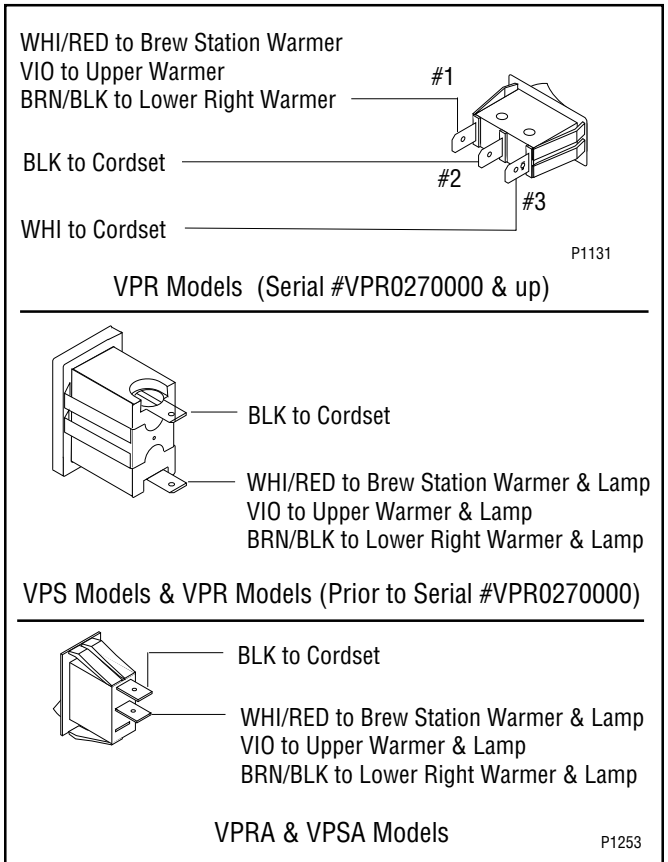

FIG. 8 ON/OFF WARMER SWITCH TERMINALS

SERVICE (cont.)

TANK HEATER

P2414

FIG. 9 TANK HEATER

Location:

The tank heater is located inside the tank and secured to the tank lid.

Test Procedures:

1. Disconnect the brewer from the power supply.
2. Check the voltage across the black and white wires on 120 volt models or the black and red wires for 220 volt models with a voltmeter. Plug-in the brewer to the power source. The indication must be:
   a) 120 volts ac for two wire 120 volt models.
   b) 220 volts ac for two wire 220 volt models.
3. Disconnect the brewer from the power source.

If voltage is present as described, proceed to #4
If voltage is not present as described, refer to the *Wiring Diagrams* and check wiring harness.

4. Disconnect the black wire and the white wire or red wire from the tank heater terminals.
5. Check for continuity across the tank heater terminals.

If continuity is present as described, reconnect the wires, the tank heater is operating properly.
If continuity is not present as described, replace the tank heater.

NOTE- If the tank heater remains unable to heat, remove and inspect heater for cracks in the sheath.

Removal and Replacement:

1. Remove the tank inlet fitting securing the fill basin to the tank lid, remove fill basin and tank inlet gasket. Set all three parts aside for reassembly.
2. Disconnect the black wire on the terminal block from the tank heater and disconnect the blue/black wire from the limit thermostat or thermal cut-off to the control thermostat.
3. Disconnect the black wire and the white or red wire from the tank heater terminals.
4. Remove sprayhead and the hex nut securing the sprayhead tube to the hood. Set aside for reassembly.
5. Remove the eight #8-32 nuts securing the tank lid to the tank.
6. Remove the tank lid with limit thermostat or thermal cut-off, sprayhead tube and tank heater.
7 Remove the two hex nuts securing the tank heater to the tank lid. Remove tank heater with gaskets and discard.
8. Install new tank heater with gaskets on the tank lid and secure with two hex nuts.
9. Install tank lid with limit thermostat or thermal cut-off, sprayhead tube and tank heater using eight #8-32 hex nuts.
10. Secure sprayhead tube to hood using a hex nut.
11. Install sprayhead.
12. Reconnect the wires to the limit thermostat or thermal cut-off, tank heater and control thermostat. See limit thermostat, thermal cut-off and control thermostat sections in this manual when reconnecting wires.
13. Install fill basin, secure with tank inlet fitting and gasket.
14. Refer to Fig. 10 when reconnecting the tank heater wires.

TANK HEATER (Cont.)

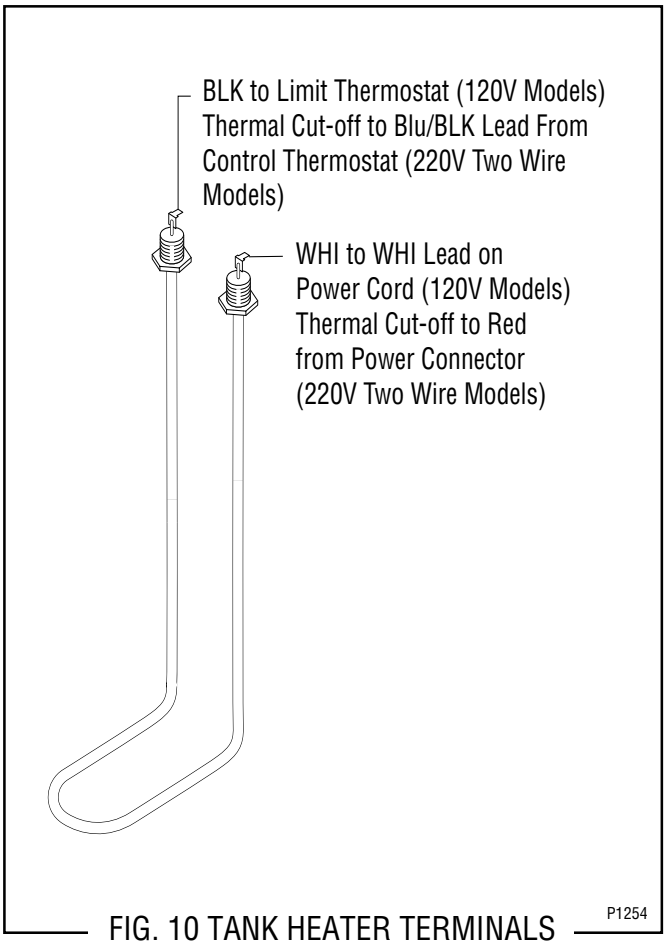

FIG. 10 TANK HEATER TERMINALS

THERMAL CUT-OFF - VPRA, VPSA

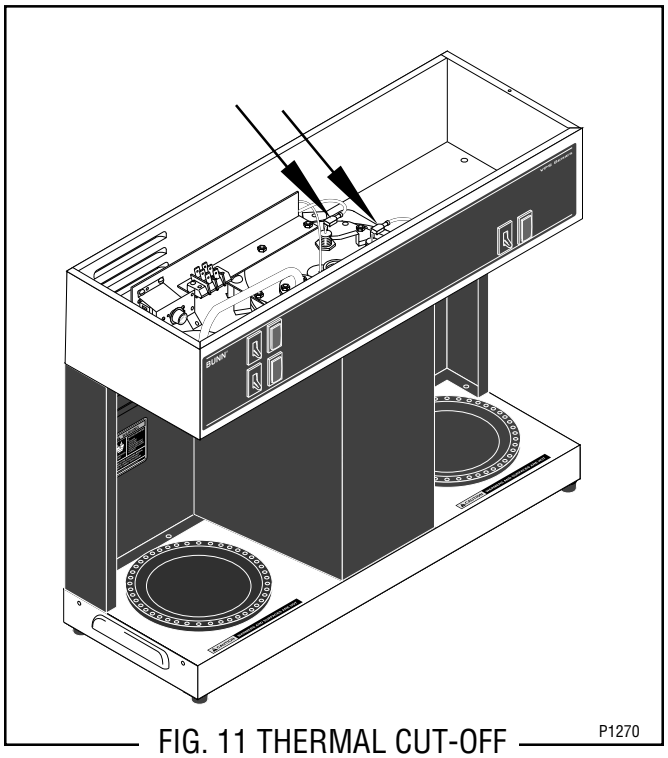

FIG. 11 THERMAL CUT-OFF

Location:

The thermal cut-outs are located inside the hood connected to the tank heater terminals.

Test Procedures:

1. Disconnect the brewer from the power source.
2. Disconnect the thermal cut-off from the tank heater and the red wire from the power connector.
3. Check for continuity across the thermal cut-off terminals with an ohmmeter.

If continuity is present as described, the thermal cut-off is operating properly.
If continuity is not present as described, replace the thermal cut-off.

4. Disconnect the thermal cut-off from the tank heater and blue/black from the control thermostat.
5. Check for continuity across the thermal cut-off terminals with an ohmmeter.

If continuity is present as decribed, the thermal cut-off is operating properly.
If continuity is not present as described, replace the thermal cut-off.

Removal and Replacement:

1. Disconnect the thermal cut-off from the tank heater and the red wire from the power connector or the blue/black wire from the control thermostat.
2. Install new thermal cut-off.
3. Refer to Fig. 12 when reconnecting wires.

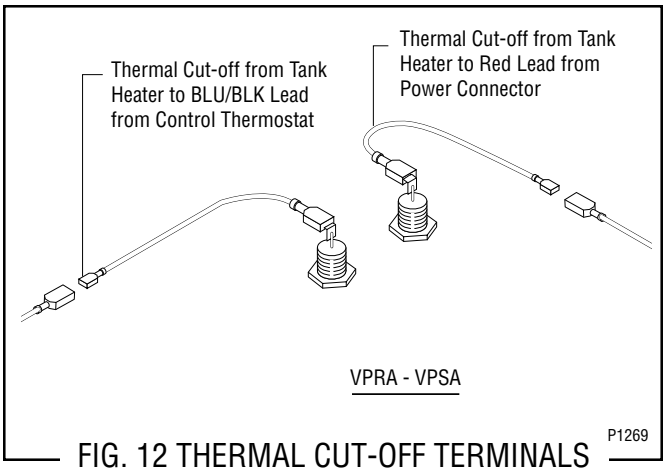

FIG. 12 THERMAL CUT-OFF TERMINALS

SERVICE (cont.)

WARMER ELEMENTS

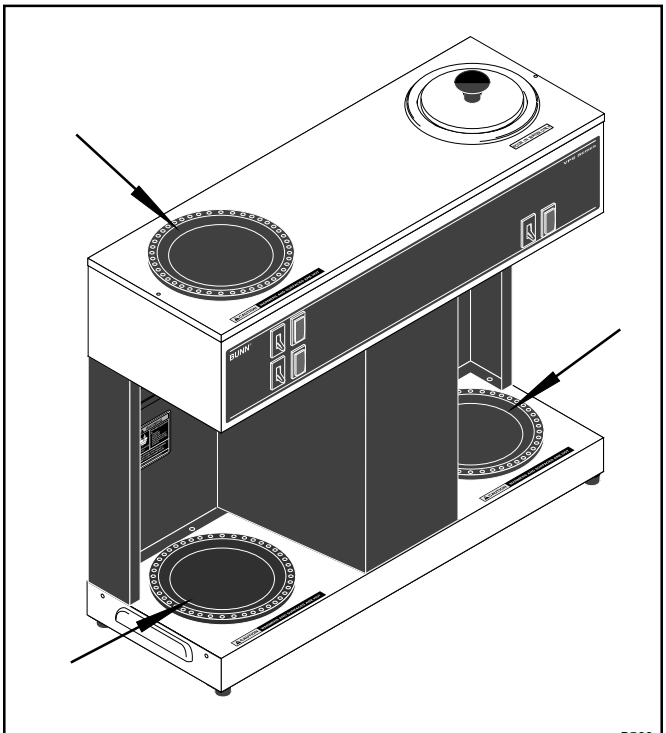

FIG. 13 WARMER ELEMENT P563

Location:

The warmer elements are located under the warmer plates.

Test Procedures:

1. Disconnect the brewer from the power source.
2. Use the white to the power cord or red wire to the power connector and the white/red, violet or brown/black wire on the "ON/OFF" switch.
3. Check voltage across the white or red and white/red, violet or brown/black with a voltmeter with the "ON/OFF" switch in the "ON" position. Plug-in the brewer to the power source. The indication must be:
   a) 120 volts ac for two wire 120 volt models.
   b) 220 volts ac for two wire 220 volt models.
4. Disconnect the brewer from the power source.

If voltage is present as described, proceed to #5.
If voltage is not present as described, refer to wiring diagrams and check brewer wiring harness.

5. Remove both wires from the warmer element and check the continuity across the two terminals on the warmer element.

If continuity is present as described, reconnect the wires on the warmer element.
If continuity is not present as described, replace the warmer element.

Removal and Replacement:

1. Remove the three #4-40 screws securing the warmer assembly to the brewer.
2. Lift the warmer assembly from the brewer.
3. Disconnect the two wires from the warmer element terminals.
4. Remove the two #8-32 nuts securing the warmer element to the warmer plate.
5. Securely install new warmer element.
6. Reconnect the two wires to warmer element terminals.
7. Securely install warmer assembly on the brewer.
8. Refer to Fig. 14 when reconnecting the wires.

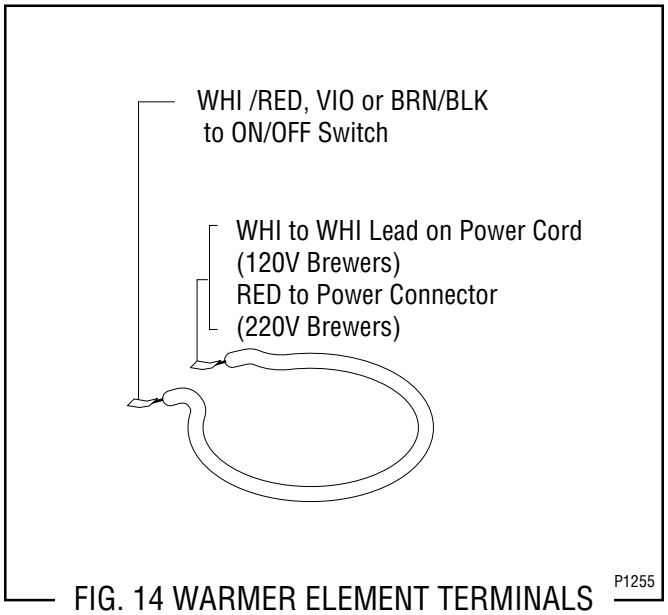

FIG. 14 WARMER ELEMENT TERMINALS P1255

SCHEMATIC WIRING DIAGRAM VPR

(Prior to Serial # VPR0270000)

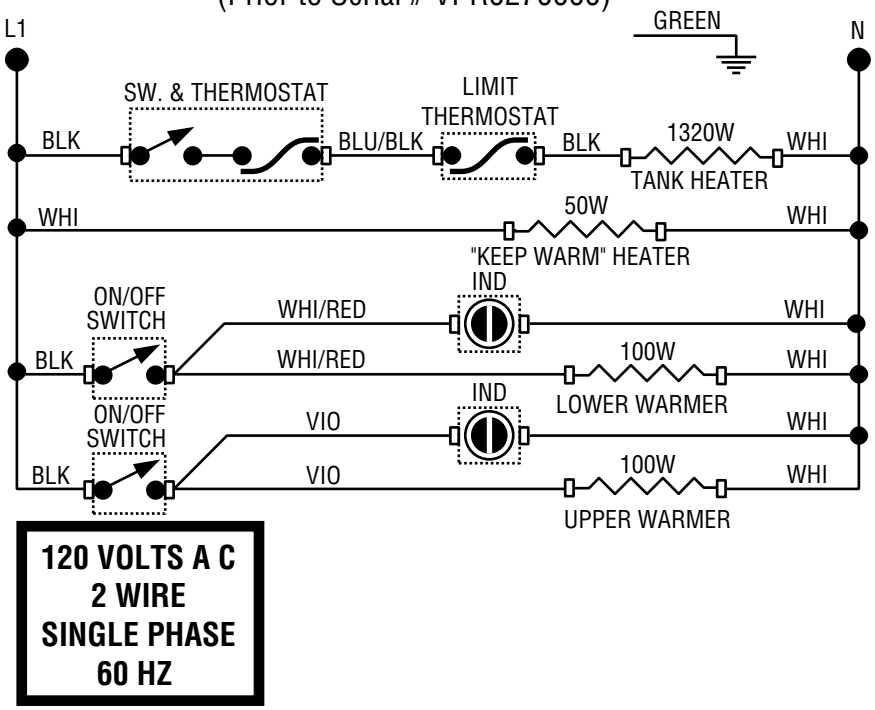

SCHEMATIC WIRING DIAGRAM VPR

(Serial # VPR0270000 & up)

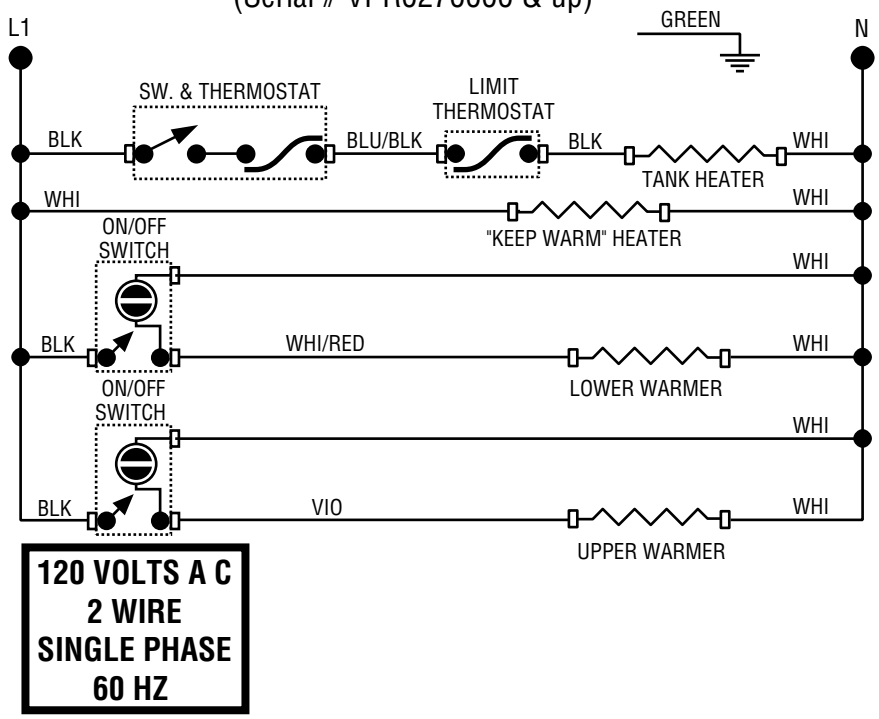

SCHEMATIC WIRING DIAGRAM VPS

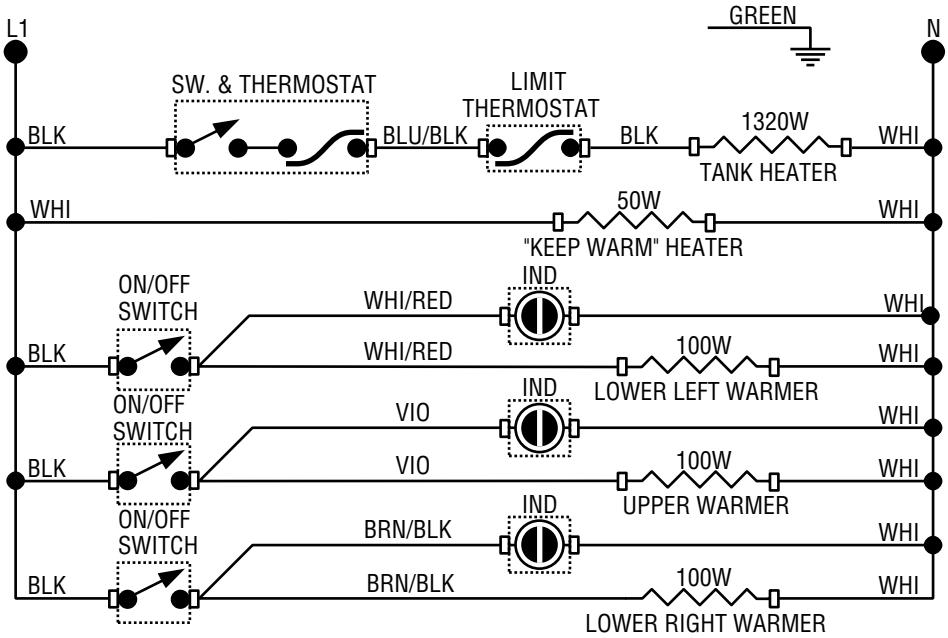

120 VOLTS A C
2 WIRE
SINGLE PHASE
60 HZ

10049.0000C 1/97 © 1988 BUNN-O-MATIC CORPORATION

SCHEMATIC WIRING DIAGRAM VPRA

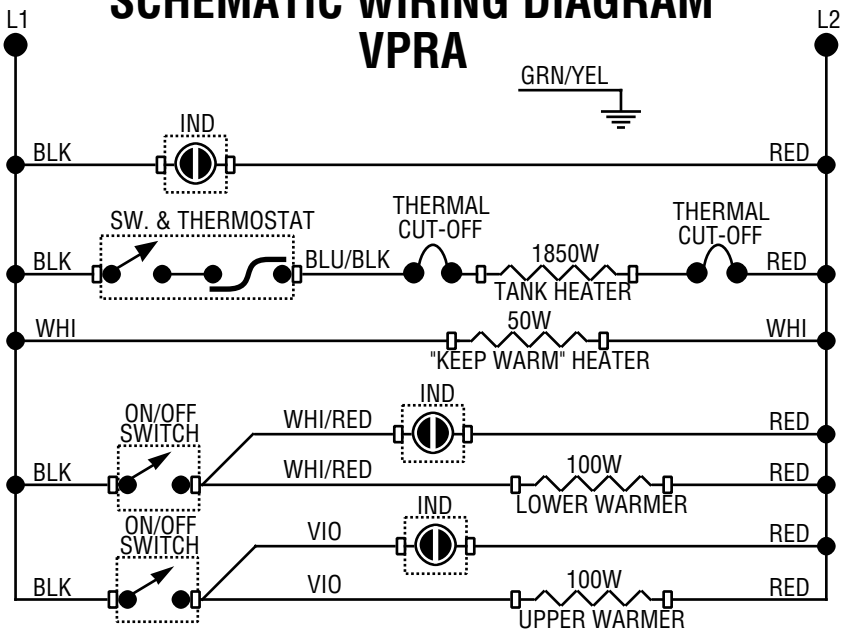

220 VOLTS A C
2 WIRE
SINGLE PHASE

SCHEMATIC WIRING DIAGRAM
VPSA

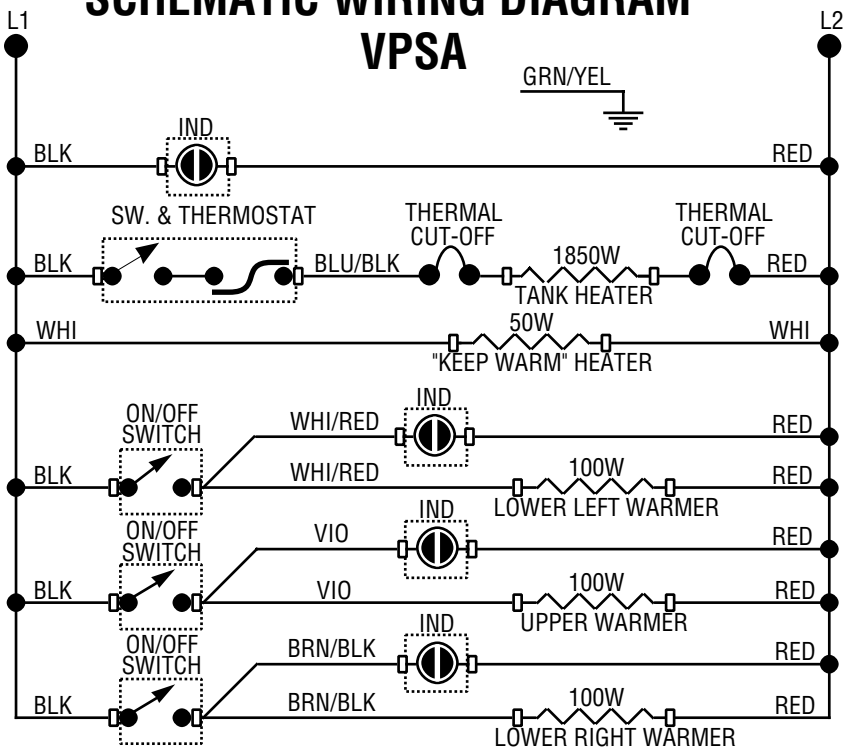

220 VOLTS A C
2 WIRE
SINGLE PHASE