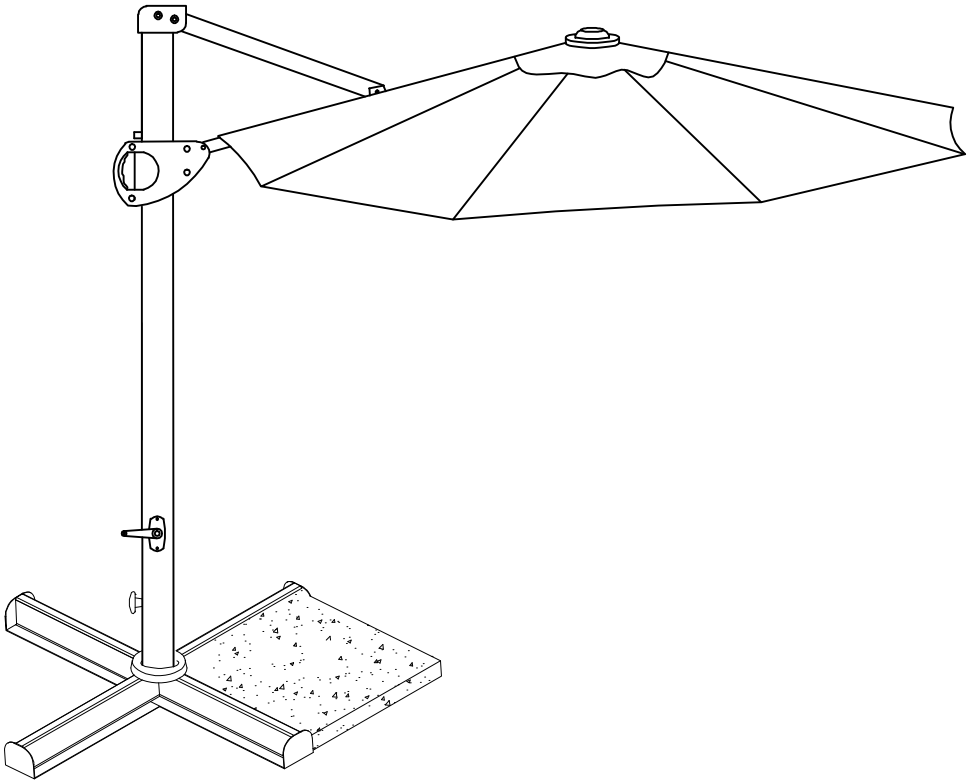

Umbrella supplied is fully assembled. Please read instructions prior installation.
Take all parts out of the box. If any parts are missing, please do not return to the place of purchase directly. Please email us first
service@abbapatio.com

REF	NB	
A	1	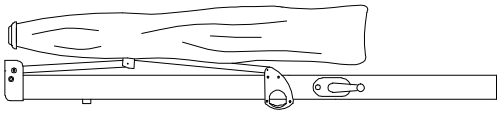
B	1	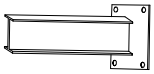
C	1	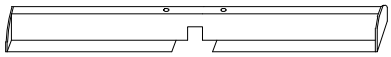
D	1	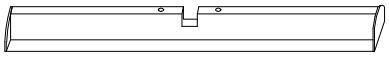
E	4	
F	1	
G	1	
H	1	

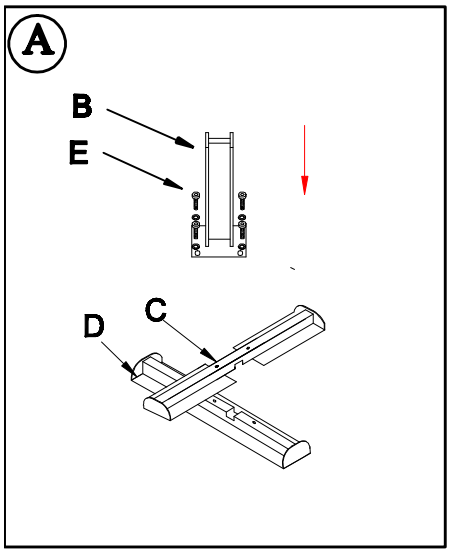

1 Place the upper cross leg (C) over the lower cross leg (D) to form a "+".

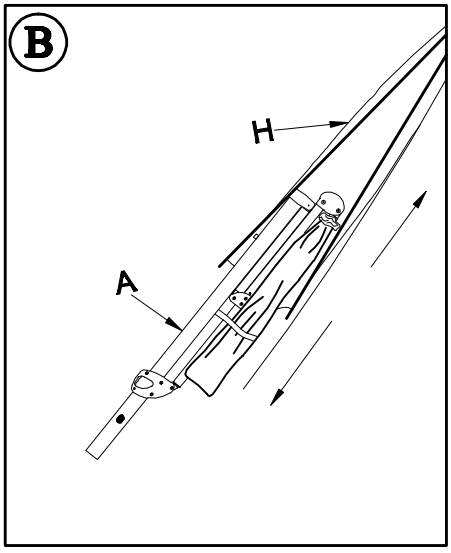

2 Unfasten the storage cover(J) from the umbrella frame.

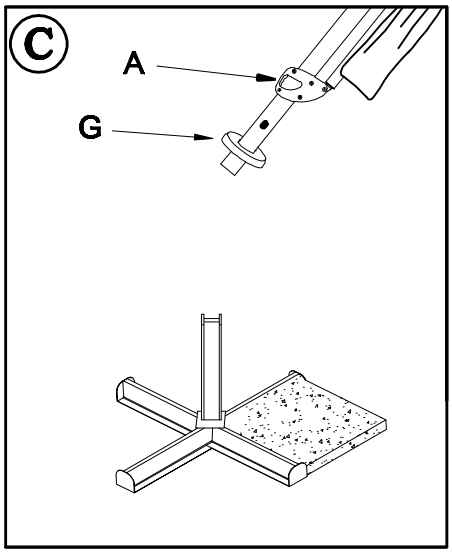

3 Place the sheath (G) onto the pole of the frame (A) and insert the pole into the assembled support base.

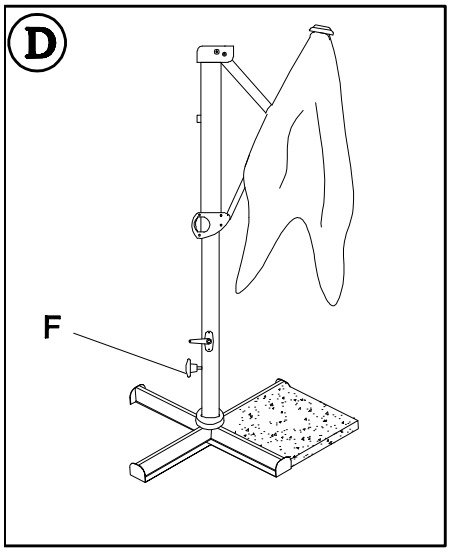

4. Tighten the thumbscrew (F).

Reminder: Please place patio stones on all four sides of the Base Cross Legs to make the base secure and solid. (Patio stones are not included in this package).

The recommended size and weight for each stons.

Square : 18.7 x 18.7 inches, 66lbs
Triangle: 18.7 x 18.7 x 26.5 inches, 33lbs

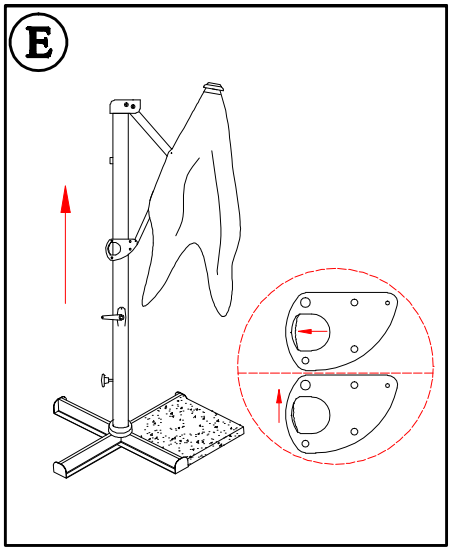

5. Hold the glide handle and squeeze it.
Slide the glide handle up along the umbrella pole.
There are five location holes along the pole. When the glide handle reaches to any hole, release the glide handle. The handle will be fixed on the pole. It should not over the stop pin.

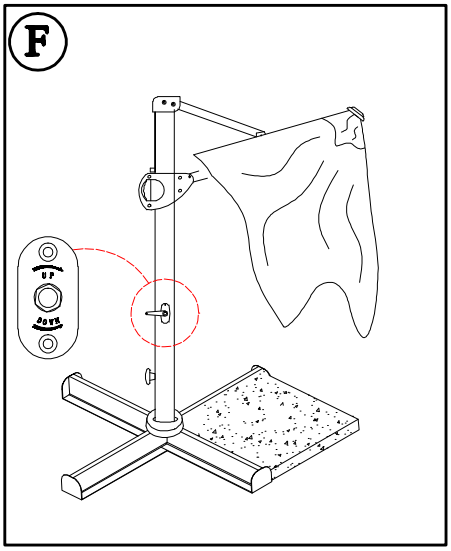

6. Turn the crank handle clock wise in the up direction to open the canopy fully.

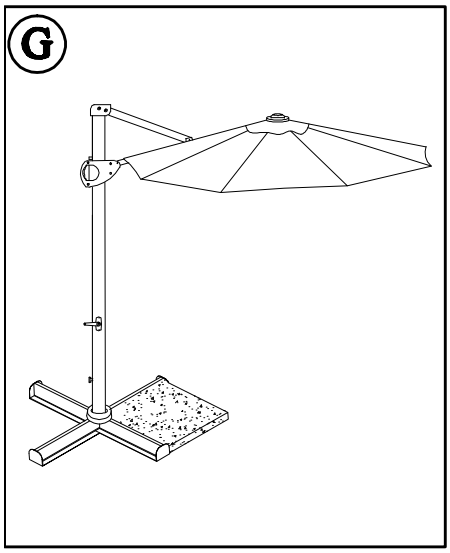

7. The umbrella totally open.

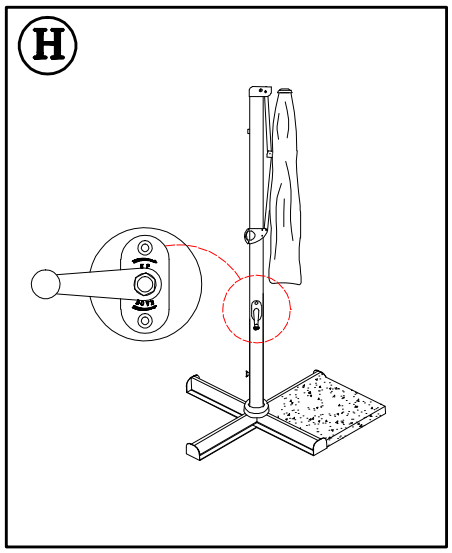

8. Turn the crank handle anti-clockwise in the down direction to close the canopy.

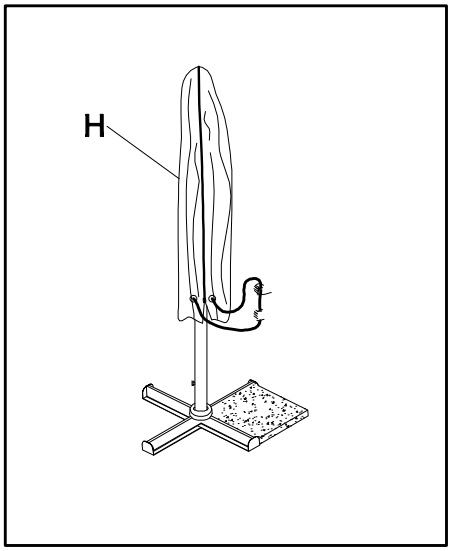

9. Put the night cover and fasten the straps when storage.