14" 10A ELECTRIC DETHATCHER

27022

218549

Owner's Manual

TOLL-FREE HELPLINE: 1-888-90WORKS (888.909.6757)

⚠ Read all safety rules and instructions carefully before operating this tool.

CONTENTS

Contents 2
Specifications 2
Important Safety Instructions 3-4
Specific Safety Rules 5
Symbols 6-7
Electrical 8-9
Know Your Electric Dethatcher 10
Assembly 11-12
Operation 13-15
Maintenance 16-19
Troubleshooting 20
Warranty 21
Exploded View 22
Parts List 23
Notes 24-25

SPECIFICATIONS

14" 10A ELECTRIC DETHATCHER

Motor ..... 120 V, AC only, 60 Hz, 10 Amps
Speed ..... 3,700 RPM
Aerating Path ..... 14”
Unit Weight ..... 25.92 lbs.

IMPORTANT SAFETY INSTRUCTIONS

⚠ W A R N I N G

TO AVOID MISTAKES THAT COULD CAUSE SERIOUS INJURY, DO NOT PLUG IN THE DETHATCHER UNTIL THE FOLLOWING STEPS HAVE BEEN READ THOROUGHLY.

- Read and become familiar with this entire instruction manual. Learn the tool's applications, limitations, and possible hazards.
- Avoid dangerous conditions. Do not use in wet or damp areas or expose to rain.
- Do not use in the presence of flammable liquids or gases.
- Keep bystanders at a safe distance. Never allow children near the tool.
- Dress for safety. Do not wear loose clothing, gloves, neckties, or jewellery (rings, watches, etc.) When operating tool. Loose clothing can get caught and pull you into moving parts.
- Always wear eye protection.
- Always remove the power cord plug from the electric outlet when making adjustments, changing parts, or cleaning.
- Avoid accidental start-ups. Make sure the power switch is in the off position before plugging in the power cord.
- Do not abuse the power cord. Do not use it to carry the tool. Keep cord away from heat, oil, sharp edges, or moving parts. Replace damaged cords immediately; they may create a shock or fire hazard.
- Never leave a running tool unattended. Turn the power switch to off. Do not leave the tool until it has come to a complete stop.
- Do not overreach. Keep proper footing and balance at all times.
- Disconnect tools. Disconnect tools from their power supplies when not in use, prior to servicing and when changing accessories such as blades, etc.
- Keep all safety devices in place.
- Know locations and functions of all controls.
- MAINTAIN TOOLS PROPERLY. ALWAYS keep tools clean and in good working order.
- CHECK FOR DAMAGED PARTS. Check for proper alignment of moving parts, binding, breakage, or any other conditions that may affect the tool's operation. Any part that is damaged should be properly repaired or replaced before use.
- CLEAN AND FREE OF OIL OR GREASE. To clean the tool, always use a clean cloth when cleaning. Do not use solvents, brake fluids, gasoline, or other petroleum products to clean the tool, as they may damage plastic parts.

SAVE THESE INSTRUCTIONS

WARNING

ONLY USE IDENTICAL REPLACEMENT PARTS WHEN SERVICING. TOLL-FREE HELPLINE: at 1-888-909-6757 (1-888-90WORKS).

WARNING

ALWAYS WEAR EYE PROTECTION. This tool can eject foreign objects into your eyes, posing the risk of permanent eye damage. Always wear safety goggles (not glasses). Ordinary eyeglasses have only impact-resistant lenses-they are not safety goggles.

SAVE THESE INSTRUCTIONS

- Do not use the dethatcher in the rain or in moist, wet conditions.
- Do not work close to the edge of swimming pools or garden ponds.
- Please observe any local noise restrictions.
- Always wear eye protection.
- Wear a dust mask. Soil mixed with fertilizers may cause harmful chemicals to be inhaled.
- Extension Cord – To reduce the risk of disconnection of appliance cord from the extension cord during operating, it is possible to tie the extension cord and power cord in a knot to prevent them from becoming disconnected during use. Make the knot as shown in figure 1, then connect the plug end of the power cord into the receptacle end of the extension cord. This method can also be used to tie two extension cords together.

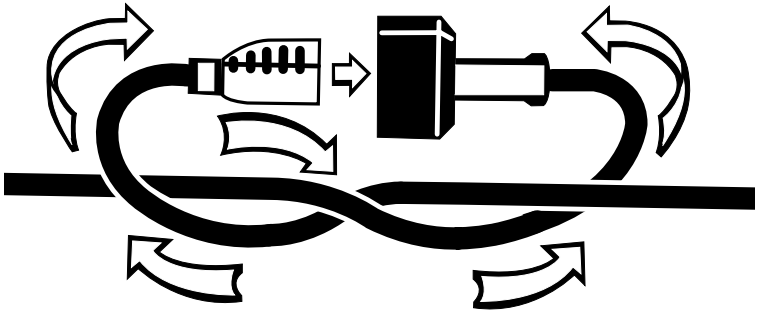

Fig. 1

- Make sure your extension cord is in good condition. When using an extension cord, be sure to use one heavy enough to carry the current your product will draw. A wire gauge size (A.W.G.) of at least 14 is recommended for an extension cord 50 feet or less in length. A cord exceeding 100 feet is not recommended mended. If in doubt, use the next heavier gauge. The smaller the gauge number, the heavier the cord. An undersized cord will cause a drop in line voltage resulting in loss of power and overheating.
- Wear hearing protection.
- Ensure that people and pets are at least 50’ (15 m) away from dethatcher while in use.
- Do not use the maximum dethatching depth setting, allow tines to wear down, start in the highest setting and adjust as tines wear down.
- Replace worn or damaged parts only with identical replacement parts.
- Ensure that work area is free of slippery spots or excessive quantities of stone.
- Do not dethatch on slopes greater than 15 degrees.

SAVE THESE INSTRUCTIONS

SYMBOLS

Some of the following symbols may be used on this product. Please study them and learn their meaning. Proper inter-pretation of these symbols will allow you to operate the product better and safer.

SYMBOL	NAME	DESIGNATION/EXPLANATION
V	Volts	Voltage
A	Amperes	Current
Hz	Hertz	Frequency (cycles per second)
W	Watts	Power
min	Minutes	Time
∿	Alternating Current	Type of current
⎓	Direct Current	Type or a characteristic of current
n_o	No Load Speed	Rational speed, at no load
⧈	Class II Construction	Double-insulated construction
/min	Per Minute	Revolutions, strokes, surface speed, orbits etc., per minute
	Wet Conditions Alert	Do not expose to rain or use in damp locations
	Read The Operator's Manual	To reduce the risk of injury user must read and understand operator's manual before using this product.
	Eye and Head Protection	Wear eye and head protection when operating this equipment.
	Ricochet	Thrown objects can ricochet and result in personal injury or property damage.
	Rotating tines	Danger – Keep hands and feet away from rotating tines. Rotating tines can cause severe injury.
MAX 15°	Operating on a slope	Do not mow a slope that has an angle of greater than 15°.
	Keep Bystanders Away	Keep all bystanders at least 50 ft. away.

SYMBOLS

The following signal words and meanings are intended to explain the levels of risk associated with this product.

SYMBOL	SIGNAL	MEANING
	DANGER	Indicates an imminently hazardous situation, which, if not avoided, will result in death or serious injury.
	WARNING	Indicates a potentially hazardous situation, which, if not avoided, could result in death or serious injury.
	CAUTION	Indicates a potentially hazardous situation, which, if not avoided, may result in minor or moderate injury.
	CAUTION	(Without Safety Alert Symbol) Indicates a situation that may result in property damage.

SERVICE

Servicing requires extreme care and knowledge and should be performed only by a qualified service technician. For service we suggest you return the product to your nearest **AUTHORIZED SERVICE CENTER** for repair. When servicing, use only identical replacement parts.

W A R N I N G

To avoid serious personal injury, do not attempt to use this product until you read thoroughly and understand completely the operator's manual. If you do not understand the warnings and instructions in the operator's manual, do not use this product. Call GREENWORKS customer service for assistance.

W A R N I N G

The operation of any power tool can result in foreign objects being thrown into your eyes, which can result in severe eye damage. Before beginning power tool operation, always wear safety goggles or safety glasses with side shields and, when needed, a full face shield. We recommend Wide Vision Safety Mask for use over eyeglasses or standard safety glasses with side shields. Always use eye protection which is marked to comply with ANSI Z87.1.

ELECTRICAL

⚠ W A R N I N G

THIS DETHATCHER IS FOR OUTDOOR USE ONLY. DO NOT EXPOSE TO RAIN OR USE IN DAMP LOCATIONS.

GUIDELINES FOR USING EXTENSION CORDS

USE THE PROPER EXTENSION CORD. Make sure your extension cord is in good condition. When using an extension cord, be sure to use one of heavy enough gauge to carry the current your product will draw. An undersized cord will cause overheating. The table below shows the correct size to use depending on cord length and nameplate ampere rating. If in doubt, use the next heavier gauge.The smaller the gauge number, the heavier the cord.

**Ampere rating (on tool faceplate)

MINIMUM GAUGE FOR EXTENSION CORDS (AWG)

(WHEN USING 120V ONLY)

Amp Rating		Total Length of Cord in Feet (meters)			
More Than	Not More Than	25' (7.6 m)	50' (15 m)	100' (30.4 m)	150' (45.7 m)
0	6	18	16	16	14
6	10	18	16	14	12
10	12	16	16	14	12
12	16	14	12	Not Recommended	

Make sure your extension cord is properly wired and in good electrical condition. Always replace a damaged extension cord or have it repaired by a qualified technician before use. Keep extension cords away from sharp objects, excessive heat and damp or wet areas.

Use a separate electrical circuit for tools. This circuit should not be less than #12 wire and should be protected with a 15 A time delayed fuse. Before connecting the motor to the power line, make sure the switch is in the OFF position and the electric current is rated the same as the current stamped on the motor nameplate. Running at a lower voltage will damage the motor.

⚠ W A R N I N G

KEEP THE EXTENSION CORD CLEAR OF THE TINES AND WORKING AREA. POSITION THE CORD SO THAT IT WILL NOT GET CAUGHT ON LUMBER, TOOLS OR OTHER OBSTRUCTIONS WHILE YOU ARE WORKING WITH A CULTIVATOR. FAILURE TO DO SO CAN RESULT IN SERIOUS PERSONAL INJURY.

ELECTRICAL

WARNING

CHECK EXTENSION CORDS BEFORE EACH USE. IF DAMAGED REPLACE IMMEDIATELY. NEVER USE TOOL WITH A DAMAGED CORD SINCE TOUCHING THE DAMAGED AREA COULD CAUSE ELECTRICAL SHOCK RESULTING IN SERIOUS INJURY.

ELECTRICAL CONNECTION

This tool is powered by a precision built electric motor. It should be connected to a **power supply that is 120 volts, 60 Hz, AC only (normal household current).** Do not operate this tool on direct current (DC). A substantial voltage drop will cause a loss of power and the motor will overheat. If the product does not operate when plugged into an outlet, double check the power supply.

SPEED AND WIRING

The speed is not constant and decreases under a load or with lower voltage. For voltage, the wiring in a shop is as important as the motor's horsepower rating. A line intended only for lights cannot properly carry a cultivator motor. Wire that is heavy enough for a short distance will be too light for a greater distance. A line that can support one cultivator may not be able to support two or three tools.

FOR ALL DOUBLE-INSULATED APPLIANCES

Replacement Parts — When servicing use only identical replacement parts.

Polarized Appliance Connections — To reduce the risk of electric shock, this appliance has a polarized plug (one blade is wider than the other) and will require the use of a polarized extension cord. The appliance plug will fit into a polarized extension cord only one way. If the plug does not fit fully into the extension cord, reverse the plug. If the plug still does not fit, obtain a correct polarized extension cord. A polarized extension cord will require the use of a polarized wall outlet. This plug will fit into the polarized wall outlet only one way. If the plug does not fit fully into the wall outlet, reverse the plug. If the plug still does not fit, contact a qualified electrician to install the proper wall outlet. Do not change the equipment plug, extension cord receptacle, or extension cord plug in any way.

KNOW YOUR DETHATCHER

The safe use of this product requires an understanding of the information on the tool and in this operator's manual as well as a knowledge of the project you are attempting. Before use of this product, familiarize yourself with all operating features and safety rules. *(See Figure 2)*

POWER BUTTON

The power button prevents accidental starting of the dethatcher.

BALE SWITCH

The bale switch starts and stops the rotation of the tines.

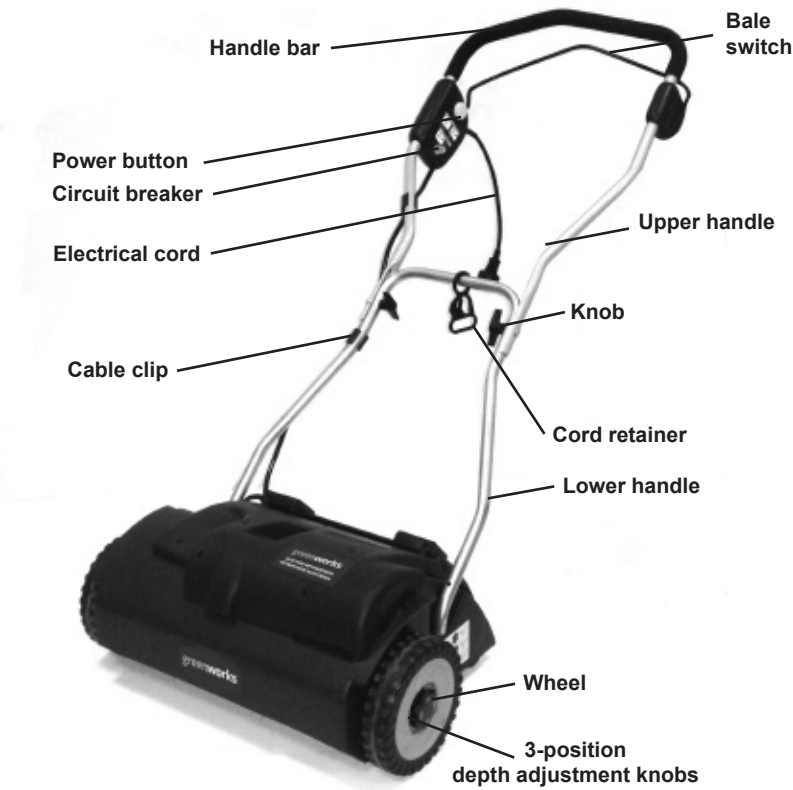

Fig. 2

ASSEMBLY

UNPACKING

• This product requires assembly.

⚠ W A R N I N G

This new product has been shipped in a partially assembled condition as described below. Carefully check the packing list below to ensure all items are included in the package; the packing list describes all loose items that are not assembled to the product as shipped. Do not operate the product if any packing list items are already assembled to your product when you unpack it. Call the customer service number below for assistance. Operation of a product that may have been improperly pre-assembled could result in serious personal injury.

• Carefully remove the product and any accessories from the box. Make sure that all items listed in the packing list are included.

• Inspect the product carefully to make sure no breakage or damage occurred during shipping.

• Do not discard the packing material until you have carefully inspected and satisfactorily operated the product.

• If any parts are damaged or missing, please call **1-888- 909-6757** for assistance.

PACKING LIST

• Dethatcher

• Accessory bag (includes)

cord retainer

knob & bolt

rubber cushion

hang for power cord

screws (2)

• Operator's Manual

⚠ W A R N I N G

Do not attempt to modify this product or create accessories not recommended for use with this product. Any such alteration or modification is misuse, and could result in a hazardous condition leading to possible serious personal injury.

⚠ W A R N I N G

Disconnect the dethatcher from the power supply until assembly is complete. Failure to comply could result in accidental starting and possible serious personal injury.

⚠ W A R N I N G

Do not connect to power supply until assembly is complete. Failure to comply could result in accidental starting and possible serious personal injury.

INSTALLING THE LOWER HANDLE *(See Figure 3.1)*

- Insert the lower handle (2) into the housing hole. Place rubber pad (1) between the housing and lower handle. Slide cord retainer onto lower handle.
- Using the supplied screws (3), fasten the lower handle to the housing using a star-shaped screwdriver, not supplied.

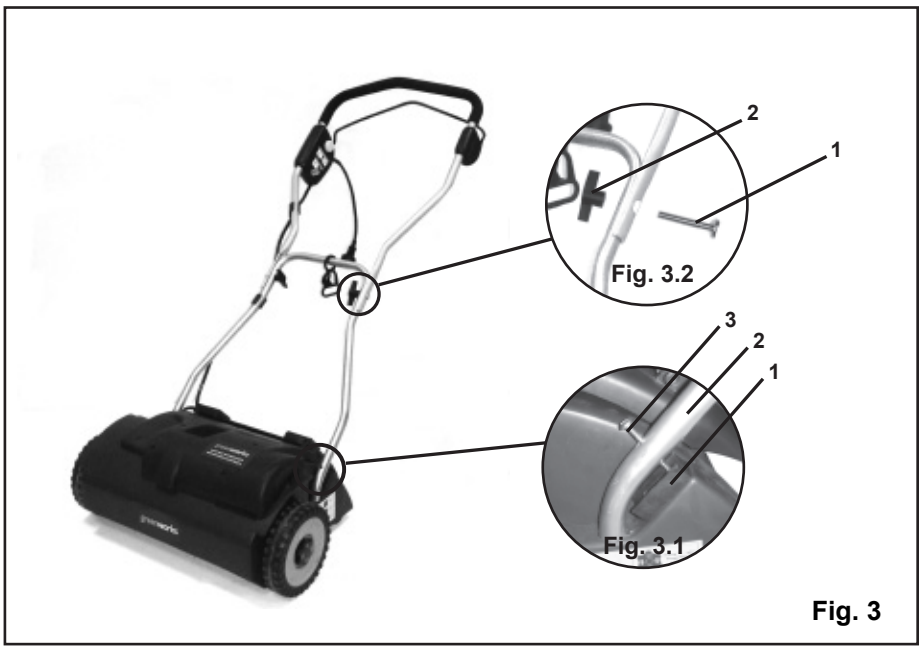

INSTALLING THE UPPER HANDLE *(See Figure 3.2)*

- Position the upper handle so the holes line up with the lower handle holes.
- Insert the supplied carriage bolt (1) through the hole from the outside of the handle bar.
- Thread the knob (2) onto the carriage bolt to tighten securely into place.

STARTING AND STOPPING THE DETHATCHER *(See Figure 4)*

I M P O R T A N T

Prior to dethatching the lawn, the lawn should be mowed to a height of approx. 2” (0.05 m). Doing this will lengthen the life span of the tines and prevent unnecessary motor overload on the dethatcher.

STARTING THE DETHATCHER

- Plug the dethatcher into an approved outdoor extension cord.
- Press and hold the Power button (1). This makes the bale switch operational.
- Pull the bale switch (2) upward to the handlebar to operate.

STOPPING THE DETHATCHER

- Release the bale.

CIRCUIT BREAKER *(See Figure 4)*

This dethatcher is equipped with a circuit breaker in order to protect the supply circuit from short-circuit overloads.

Follow these steps if the switch pops out:

- Release the trigger switch, and allow the dethatcher to stop and cool down for a minute.
- Press the circuit breaker in order to reset it. Resume operation *(See Figure 4.)*

Follow these steps if the switch pops out again shortly after the first time:

- Allow the dethatcher to stop and cool down for 15 to 30 minutes.
- After the dethatcher has cooled down, press the circuit breaker in order to reset it. Resume operation.

If the circuit breaker does not stay in, or if it continues to pop out during operation, please call **1-888- 909-6757** for assistance.

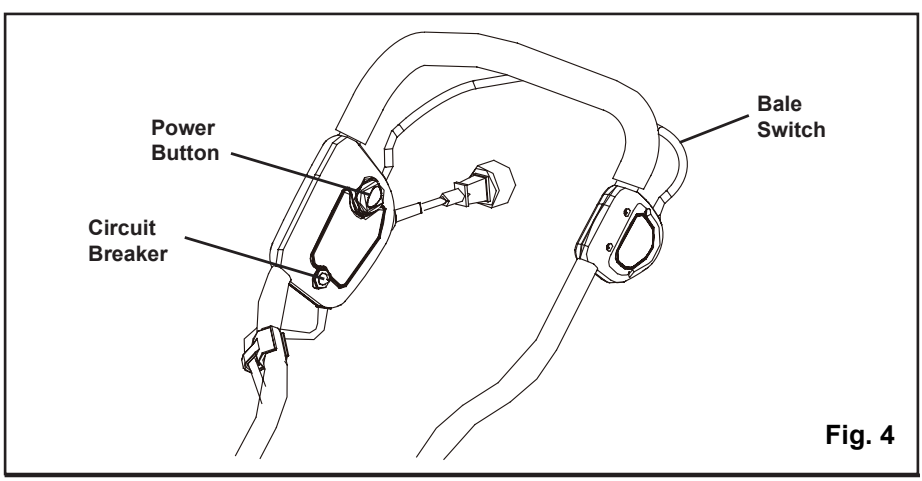

Fig. 4

USING THE CORD RETAINER *(See Figure 5)*

This dethatcher is equipped with a cord retainer in order to prevent the extension cord from disconnecting from the power cord while the mower is in use. The cord retainer hangs from the cord guide bar.

NOTE: Do not plug the extension cord into the outlet until it has been connected to the cord retainer and plugged into the mower.

To use the cord retainer:

- Fold the extension cord in order to forming a tight loop near the retainer.
- Push the loop through the bottom hole in the retainer.
- Slide the loop over the retaining clip, and pull down until the cord is secured.

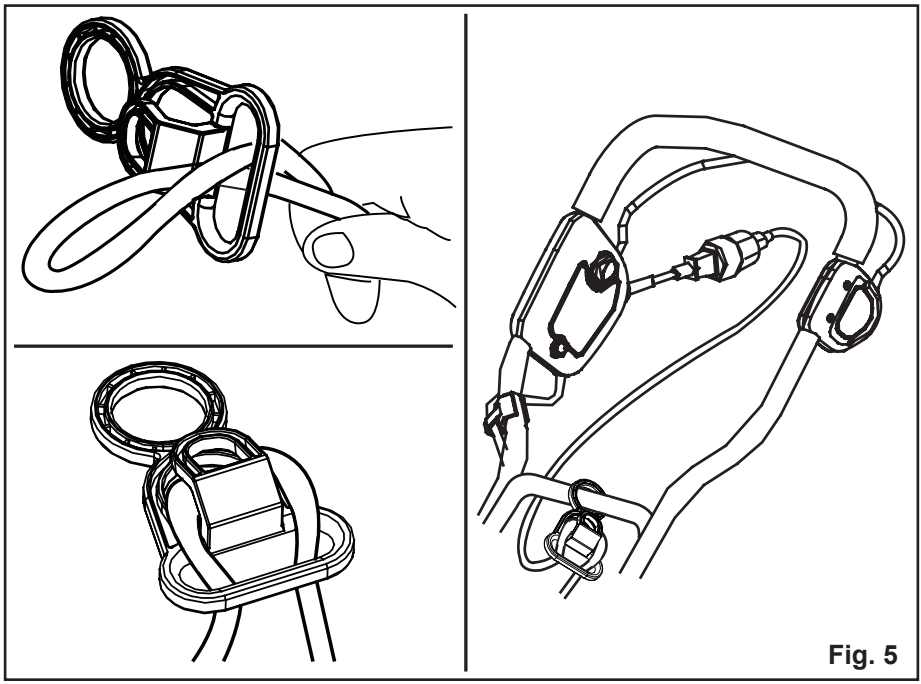

Fig. 5

Fig. 5

ADJUSTING THE DETHATCHER DEPTH *(See Figure 6)*

⚠ C A U T I O N

BEFORE YOU ADJUST THE DETHATCHER DEPTH, TURN OFF THE POWER, UNPLUG THE TOOL AND ENSURE THE MOTOR HAS STOPPED.

- The dethatcher depth is adjusted by turning the hubcaps. You can choose from three different depth settings by pulling out and turning hubcaps.
- When setting “I” is at the bottom, the high setting is locked in. The dethatcher depth is approx 1 mm above the ground. Select depth setting “I” when transporting the dethatcher.
- When setting “II” is at the bottom, the middle setting is locked in. The dethatcher depth is approx 1/8” (3 mm).
- When setting “III” is at the bottom, the low setting is locked in. The dethatcher depth is approx 3/8” (10 mm).

⚠ C A U T I O N

THE HUBCAPS MUST BE FIRMLY LOCKED INTO PLACE! AT THE BEGINNING IT IS BEST TO SELECT DEPTH SETTING ”I” AT THE START. YOU CAN THEN SWITCH TO SETTING “II” WHEN THE DETHATCHER SPIKES HAVE BECOME WORN.

Fig. 6

SETTING YOUR HEIGHT LEVELS:
For optimal performance it is recommended to set height of both wheels to Highest settings. Adjust height lower only if required.
DO NOT PULL DETHATCHER BACKWARDS ONLY PUSH FORWARD WHILE IN USE.

Setting “I”， when transporting the dethatcher.

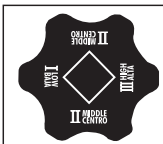

Setting “II”， the dethatcher depth is approx 1/8” (3 mm).

Setting “III”， the dethatcher depth is approx 3/8” (10 mm).

The dethatcher cylinder can cause injuries! Prior to making adjustments, unplug unit and wait until the dethatcher cylinder has stopped. Wear heavy-duty work gloves when making adjustments. If the dethatcher cylinder is not yet worn but individual springs have broken, these must be replaced. Only identical replacement springs may be used.

Toll-free helpline: **1-888- 909-6757**.

REPLACING THE TINES *(See Figure 7 - 8.)*

- Disconnect dethatcher from power source.
- Turn the dethatcher over.
- Remove the two star-shaped screws (1), flat washer (2) and lock washer (3) secure the tine casing and remove the two nuts on the opposite side with a star-shaped screwdriver and a 8mm wrench or socket - (not included).
- Press the locker (4) on the edge of the shaft with a slotted screwdriver to seperate the tine casing from the shaft.
- Replace the worn or broken tines with a new one. Fasten the the tine casing back together using the flat washer and lock washer in the order and placement which they were previously removed.

⚠ W A R N I N G

All the screws to mount the halves of the tine holder must have flat washer (2) and lock washer (3) on their threads, to prevent screws from loosening during usage.

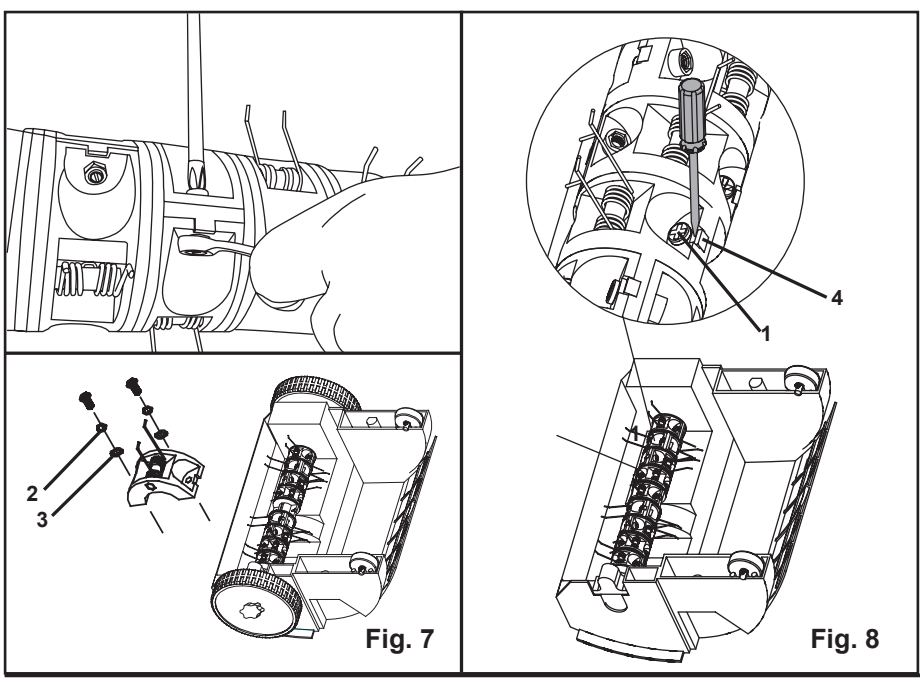

Fig. 7

Fig. 8

REPLACING THE TINES *(See Figure 9)*

- Remove the tine cartridge as demonstrated on page 16.
- Secure tine cartridge on a workbench.
- Push out the pin using a screwdriver (Not Supplied). This may require the use of a rubber mallet if more strength is required.
- Remove and discard the worn/broken tines.
- Replace the tine into position and slide the pin back into place pressing the pin against a solid surface to pressure it back into place.

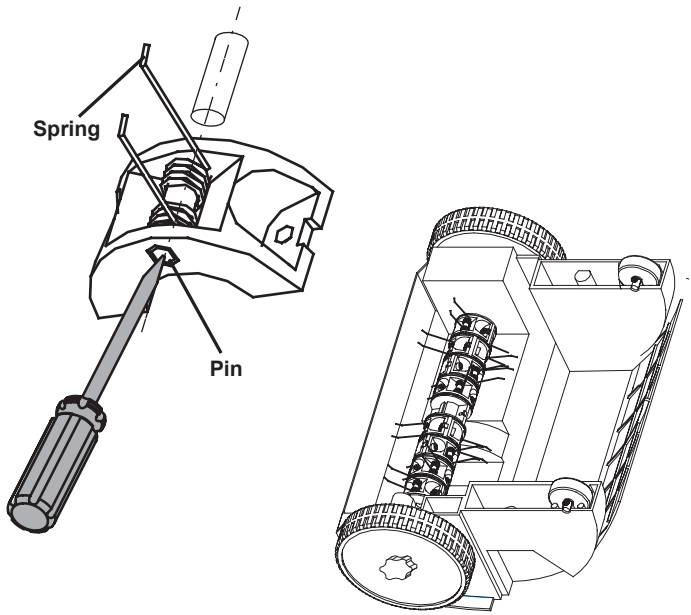

Fig. 9

MAINTENANCE

DANGER! THE DETHATCHER CYLINDER CAN CAUSE INJURIES.

Prior to maintenance, unplug from the power source and wait until the dethatcher cylinder has stopped. Wear heavy-duty gloves for performing maintenance. The lawn dethatcher should be cleaned after each use.

⚠ W A R N I N G

WHEN SERVICING, USE ONLY IDENTICAL REPLACEMENT PARTS. USE OF ANY OTHER PARTS MAY CREATE A HAZARD OR CAUSE PRODUCT DAMAGE.

⚠ W A R N I N G

ALWAYS WEAR SAFETY GOGGLES OR SAFETY GLASSES WITH SIDE SHIELDS DURING PRODUCT OPERATION. IF OPERATION IS DUSTY, ALSO WEAR A DUST MASK.

⚠ W A R N I N G

BEFORE INSPECTING, CLEANING, OR SERVICING THE MACHINE, DISCONNECT THE PLUG FROM POWER SOURCE AND WAIT FOR ALL MOVING PARTS TO STOP. FAILURE TO FOLLOW THESE INSTRUCTIONS CAN RESULT IN SERIOUS PERSONAL INJURY OR PROPERTY DAMAGE.

GENERAL MAINTENANCE

Avoid using solvents when cleaning plastic parts. Most plastics are susceptible to damage from various types of commercial solvents and may be damaged by their use. Use clean cloths to remove dirt, dust, oil, grease, etc.

⚠ W A R N I N G

DO NOT AT ANY TIME LET BRAKE FLUIDS, GASOLINE, PETROLEUM-BASED PRODUCTS, PENETRATING OILS, ETC., COME IN CONTACT WITH PLASTIC PARTS. CHEMICALS CAN DAMAGE, WEAKEN, OR DESTROY PLASTIC WHICH MAY RESULT IN SERIOUS PERSONAL INJURY. ONLY THE PARTS SHOWN ON THE PARTS LIST ARE INTENDED TO BE REPAIRED OR REPLACED BY THE CUSTOMER. ALL OTHER PARTS SHOULD BE REPLACED AT AN AUTHORIZED SERVICE CENTER.

Risk of injury and physical damage!

Do not clean the lawn dethatcher under running water (particularly under high pressure).

Do not use hard or pointed objects for cleaning the lawn dethatcher.

To save space, the lawn dethatcher can be folded up for storage by releasing the wing nuts. Take care during this process that the power cable does not become trapped.

Store the lawn dethatcher in a dry, closed room to which children cannot gain access.

- Switch off the motor, unplug from the power source and wait until the aerator cylinder stops.
- Move the depth adjustment knob to the highest position and lift the lawn dethatcher when transporting it over sensitive surfaces, e.g., tiles.
- Always clean the bottom of the dethatcher after each use and before storage.
- Carefully inspect all tines and cartridges for damage and replace when required.

This device must not be disposed of with normal household waste; it must be disposed of in accordance with local regulations.

TROUBLESHOOTING

PROBLEM	POSSIBLE CAUSE	SOLUTION
Abnormal noise.	Foreign objects on the dethatcher cylinder are hitting	1. Switch off the dethatcher, remove the power cord from the outlet and wait until the cylinder has stopped rotating.
Clattering in the unit. Whistling sound.	Foreign objects blocking the dethatching cylinder.	1. Remove foreign objects. 2. Check the dethatcher immediately.
Whistling sound.	Cog belt slipping.	1. Contact an authorized service centre.
Motor will not start.	Faulty cable. The conductor cross-section of the extension cable may be too low.	1. Contact your electrician.
Motor cuts out because blocking protection has been activated.	Blocked by foreign objects.	1. Switch off the motor, remove the plug from the socket and wait until the dethatcher has stopped rotating. 2. Remove the foreign objects. 3. After approx.1 minute, switch on the dethatcher.
	Dethatcher depth is too low. Cylinder has been adjusted for wear without actual wear to the tines.	1. Let the motor cool down. 2. Set depth adjustment correctly.
	The grass is too tall.	1. Mow the lawn before dethatching.
Dethatching results are not satisfactory.	Spring tine wear.	1. Adjust the dethatcher cylinder.
	Cog belt faulty.	1. Contact an authorized service centre.
	Lawn has grown too tall.	1. Mow the lawn before using the dethatcher.

LIMITED FOUR-YEAR WARRANTY

GREENWORKS™ hereby warranties this product, to the original purchaser with **proof of purchase**, for a period of four (4) years against defects in materials, parts or workmanship. GREENWORKS™, at its own discretion will repair or replace any and all parts found to be defective, through normal use, free of charge to the customer. This warranty is valid only for units which have been used for personal use that have not been hired or rented for industrial/ commercial use, and that have been maintained in accordance with the instructions in the owners' manual supplied with the product from new.

ITEMS NOT COVERED BY WARRANTY:

1. Any part that has become inoperative due to misuse, commercial use, abuse, neglect, accident, improper maintenance, or alteration; or
2. The unit, if it has not been operated and/or maintained in accordance with the owner's manual; or
3. Normal wear, except as noted below;
4. Routine maintenance items such as lubricants, tines;
5. Normal deterioration of the exterior finish due to use or exposure.

GREENWORKS HELPLINE (1-888-90WORKS):

Warranty service is available by calling our toll-free helpline, 9 a.m. to 5 p.m. EST. Monday – Friday at **1-888-909-6757 (1-888-90WORKS)**.

TRANSPORTATION CHARGES:

Transportation charges for the movement of any power equipment unit or attachment are the responsibility of the purchaser. It is the purchaser's responsibility to pay transportation charges for any part submitted for replacement under this warranty unless such return is requested in writing by GREENWORKS.

EXPLODED VIEW

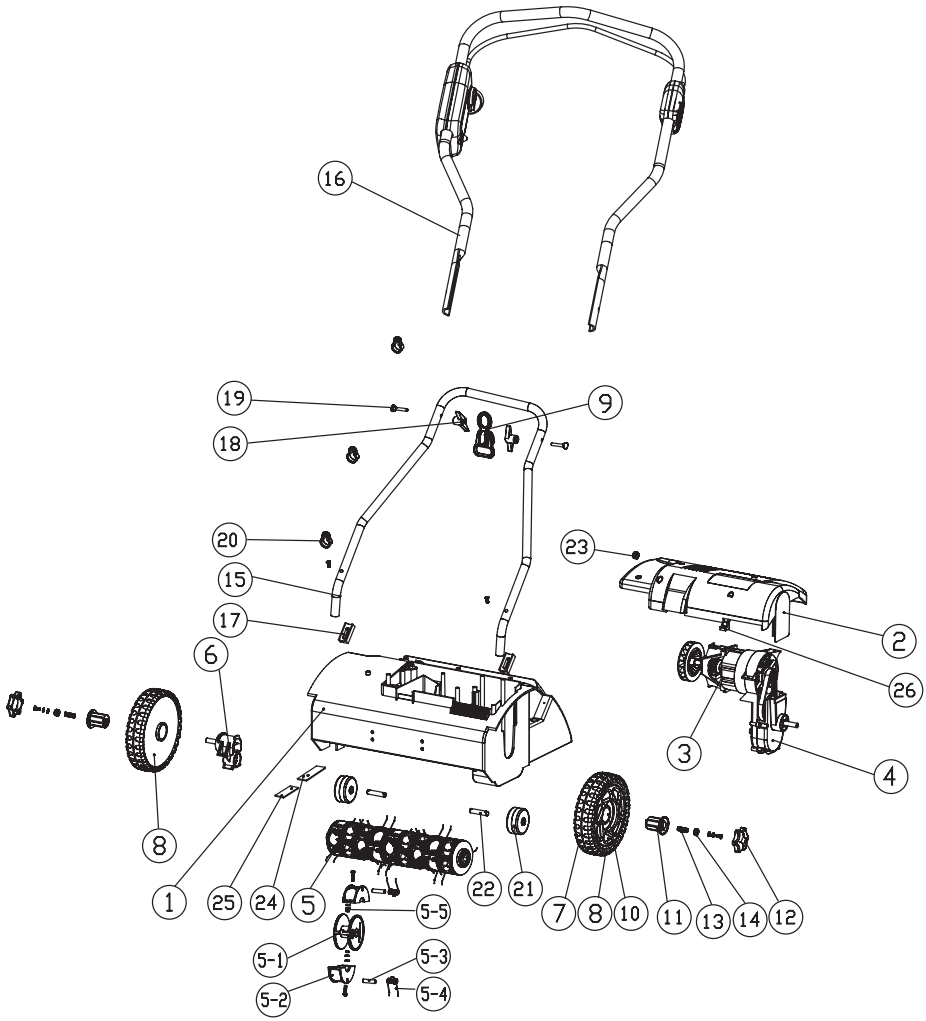

PARTS LIST

ITEM NO.	PART NO.	DESCRIPTION	QTY
1	27022-1	Housing	1
2	27022-2	Cover for motor	1
3	27022-3	Motor assy.	1
4	27022-4	Gear case assy.	1
5	27022-5	Tines assy.	1
5-1	27022-5-1	Base for tine	18
5-2	27022-5-2	Tine cartridge	18
5-3	27022-5-3	Pin	18
5-4	27022-5-4	Tine	18
5-5	27022-5-5	Bolt, nut and washer	18
6	27022-6	Bracket for tines assy.	1
7	27022-7	Tire for front wheel	2
8	27022-8	Front wheel	2
9	27022-9	Cord retainer	1
10	27022-10	Bush for front wheel	2
11	27022-11	Shaft for high adjustment	2
12	27022-12	High adjustment knob	2
13	27022-13	Spring for high adjustment	2
14	27022-14	Baffle for high adjustment spring	2
15	27022-15	Lower handle	1
16	27022-16	Upper handle assy.	1
17	27022-17	Rubber cushion	2
18	27022-18	Knob	2
19	27022-19	Bolt	2
20	27022-20	Hang for power cord	3
21	27022-21	Rear wheel assy.	2
22	27022-22	Shaft for rear wheel	2
23	27022-23	Ringer for power cord	1
24	27022-24	Big cover	1
25	27022-25	Little cover	1
26	27022-26	Support for motor	1

NOTES

NOTES

TOLL-FREE HELPLINE: 1-888-90WORKS (888.909.6757)

Rev: 01 (09-21-12)

Printed in China on 100% Recycled Paper