HAIFUAN

HFAS110BRM USER MANUAL

1. Product instruction

Item No.	HFAS110BRM
Dimension	137*60*12MM / 5.39 X 2.36 X 0.47”
Material	Zinc Alloy
Weight	1kgs / 2.2 pounds

1.1 Standard Single latch :

Backset is adjustable between 60mm(2-3/8”) and 70mm(2-3/4”)

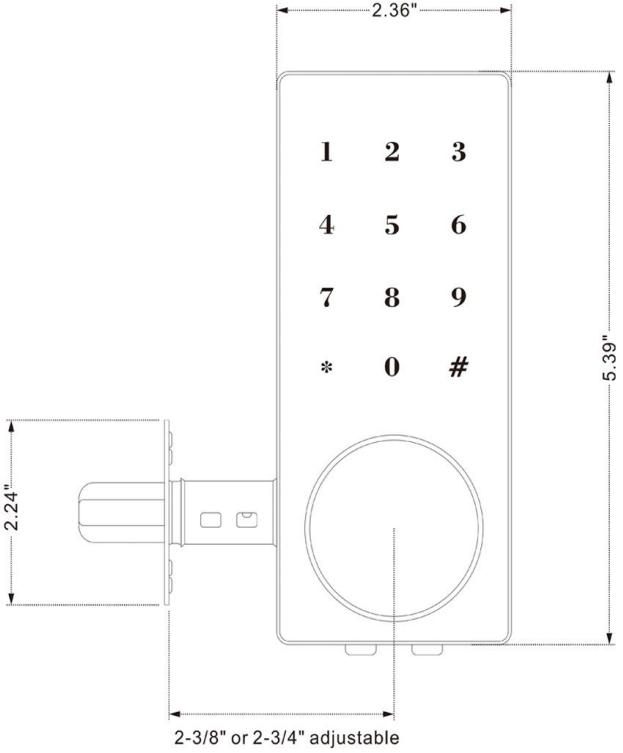

1.2 Technical Specification

Remote effective distance	30m / 1181”
Unlock method	Code, Remote Control, Mechanical key
Code length	4-8 digits
User capacity	20 users(10 codes+10 remote controls)
Power supply	4pcs AA batteries / CR2032 3V(remote control version)
Static current	≤30uA
Working current	≤200mA
Suitable Door Thickness	38-50mm / 1.5”-1.97”
Backup power terminal	9V(at the bottom of front plate)
Handle Orientation	Reversible
Initial Master code	123456
Initial Debug code	123(After installed, press “123”,then”#” to open door directly, automatically become invalid after changing master code)
Auto Lock	Press “#” for 2 seconds to lock the door when you are outside. Or you can set for auto lock(see operation 5.1)

2 Installation Instructions

Product Structure Map

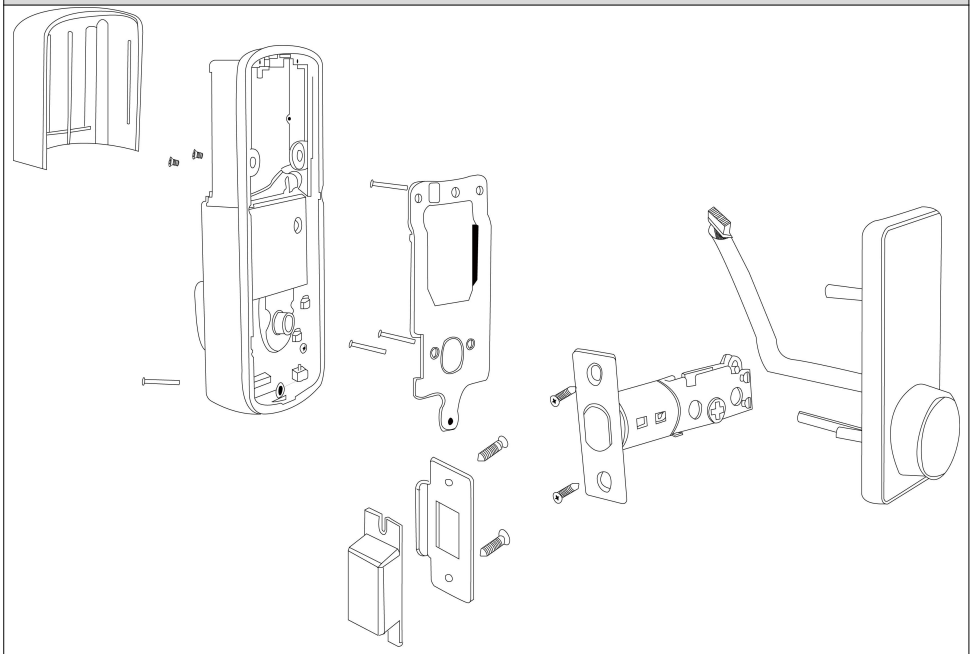

2.1 Drill Holes

2.1.1 Measure up approximately 36"from the door bottom. Apply template to the door edge. Mark center of door edge as indicated on template.

2.1.2 Mark center hole on door face through guide on template for 2-3/8"(60mm) or 2-3/4"(70mm) basket.

2.1.3 Drill 2"or 2-1/8"hole through door face as marked for lockset. It is recommended that holes be drilled from both sides to prevent splitting.

2.1.4 Drill 31/32"or 1" hole in center of door edge for latch. Check template for correct size for your latch application.

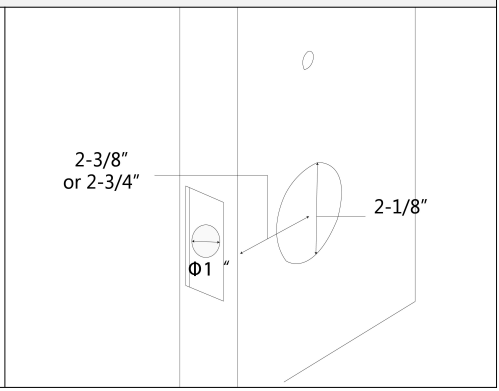

2.2 Install Latch And Strike Plate

2.2.1 Insert latch in the hole keeping it parallel to face of door. Mark outline and remove latch.

2.2.2 Chisel 1/8"deep or until latch face is flush with door edge.

2.2.3 Insert latch with the beveled edge of the latch facing the door frame and tighten screws.

2.2.4 Install strike plate on door jamb accordingly.

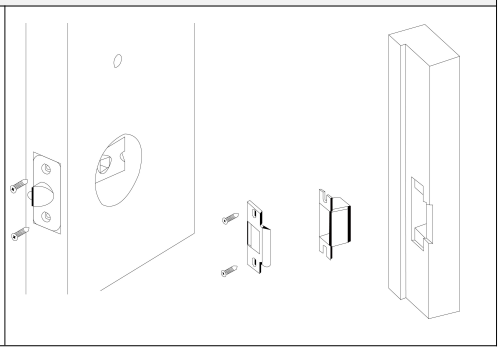

2.3 Install Front Plate

2.3.1 Fix one connecting screw tube on the front plate.

2.3.2 Place water proof rubber under the front plate.

2.3.3 Install front plate to door, pull the data line through door hole.

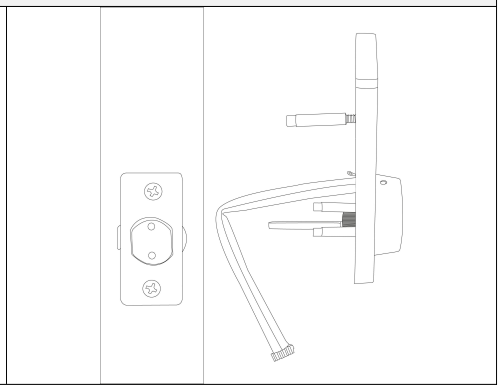

2.4.Install Inner Back Plate

2.4.1 Install the inner back plate with three screws.

2.4.2 Pull the data line out.

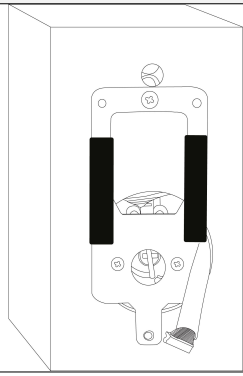

2.5.Install Back Plate

2.5.1 Connect the data line to back plate.

2.5.2 Fix back plate with three screws

2.5.3 Install 4*AA alkaline batteries.

2.5.4 Put the battery case on.

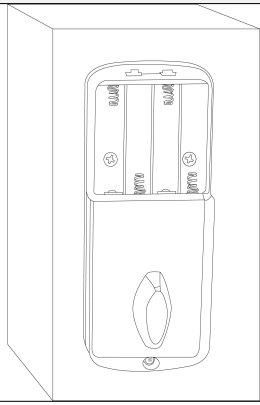

2.6 Test the Lock

2.6.1 Test the lock and make adjustment if necessary.

2.6.2 If you buy the remote control version of S100, please note that a CR2032 3V button cell is required for the remote control.

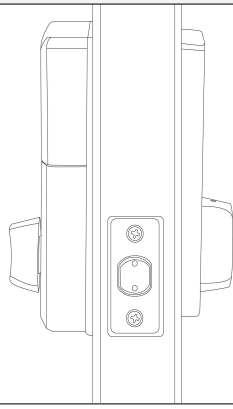

3 Operating Instruction

3.1.1 Initialize the Lock (by keypad): （MC→#→0→#→MC→#）

	Operating steps	Locks status
1	Input the current master code: "Master Code", then press "#	You will hear one beep.
2	Input "**0**" then "**#**" within 10 seconds(before the indicator light extinguishes)	You will hear one beep.
3	Input current "Master Code" again then "#"	The lock will beep 4 times if operation is successful. The master code is now reset to 123456, and user code is reset to 123.

3.1.2 **Initialize the Lock (by reset button):**

Operating steps	Locks status
Disassemble the lock from door, connect data line between front panel and back panel, install batteries	You will hear a beep first, then after about 1 second later, you will hear another beep.
Press and hold the reset button for 10 seconds until you hear 4 beeps(Must press the reset button when you hear the first beep after you install the batteries)	You will hear four beeps if operation successful. Now the master code has been reset to 123456. And initial code to open the lock is 123.

Note: If you don't hear a beep when put the battery back, then touch the front panel to let it work, now remove one battery, then put the battery back, you will hear it now, press and hold the reset button when you hear the first beep (If you press the button after you hear the second beep, this operation will fail), this operation will clear all the users added before.

3.2 Modify Master code, 4-8 digits (eg.:12345678) （MC→#→4→#→New MC→#→New MC→#）

	Operating steps	Locks status
1	Input the initial master code: "123456",then press "#	You will hear two beeps.
2	Input "**4**" then "**#**" within 10 seconds(before the indicator light extinguishes)	You will hear two beeps.
3	Input "New Master Code"(4-8digits) then "#"	You will hear two beeps.
4	Input "New Master Code" again, then "#".	You will hear 2 beeps, indicator light flash blue, New Master Code set successful.

3.3.Add Code User （MC→#→1→#→New code→#→Re-enter New Code→#）

	Operating steps	Locks Status
1	Input the "**Master Code**" then "**#**"	You will hear two beeps.
2	Input "**1**" then "**#**" within 10 seconds(before the indicator light extinguishes)	You will hear two beeps.
3	Input "**new user code" (4-8 digits)** within 10 seconds(before the indicator light extinguishes) then "**#**"	You will hear two beeps.
4	Input "**new user code"** again then "**#**"	You will hear two beeps. Code set successful

Open door operation :

	Operating steps	Locks status
1	Input "**Code**" then "**#**"	You will hear one beep, and indicator light keeps in blue, you can also hear the sound of lock motor started, turn the handle to open the door.
2	After 5 seconds	You will hear two beeps, red light flashes twice, back to locked status, and the indicator light extinguishes.

3.4 **Add Remote Control User（MC→#→5→#→Press Unlock Button on Remote Control）**

	Operating steps	Locks status
1	Input "**Master Code**" then "**#**"	You will hear two beeps.
2	Input "**5**" then "**#**" within 10 seconds(before the indicator light extinguishes)	You will hear two beeps.
3	Press unlock button on remote control. If you want to add another remote control, press the unlock button on that remote control, too.	You will hear two beeps. Remote control added successful.
4	Press lock button on remote control to lock the door	You will hear two beeps.

Open door operation :

	Operating steps	Locks status
1	Press unlock button on remote control	You will hear one beep, and indicator light keeps in blue, you can also hear the sound of lock motor started, turn the handle to open the door.
2	After 5 seconds	"beep" twice, red light flashes twice, back to locked status, and the indicator light extinguishes.

4. Delete user codes

4.1. **Delete a user code：（MC→#→2→#→existing user code→#）**

	Operating steps	Locks status
1	Input the "**Master Code**" then "**#**"	You will hear two beeps.
2	Input "**2**" within 10 seconds(before the indicator light extinguishes) then "**#**"	You will hear two beeps.
3	Input "**user code**" you want to delete within 10 seconds(before the indicator light extinguish) then "**#**"	You will hear two beeps. Code delete successful

4.2. **Delete all user codes：（MC→#→3→#→MC→#）**

	Operating steps	Locks status
1	Input the "**Master Code**" then "**#**"	You will hear two beeps.
2	Input "**3**" then "**#**" within 10 seconds(before the indicator light extinguishes)	You will hear two beeps.
3	Input the "**Master Code**" then "**#**"	You will hear two beeps. Operation successful

4.3. **Delete all remote controls**: **（MC→#→6→#→MC→#）**

	Operating steps	Locks status
1	Input the "**Master Code**" then "**#**"	You will hear two beeps.
2	Input "**6**" then "**#**" within 10 seconds(before the indicator light extinguishes)	You will hear two beeps.
3	Input the "**Master Code**" then "**#**"	You will hear two beeps. Operation successful

5. **Set Auto Lock:**

5.1 Set Auto Lock:（MC→#→8→#→auto lock time(20-999seconds)→#）

	Operating steps	Locks status
1	Input the "**Master Code**" then "**#**"	You will hear two beeps.
2	Input "**8**" then "**#**" within 10 seconds(before the indicator light extinguishes)	You will hear two beeps.
3	Input the "**auto lock time(20-999s),default is 5 minutes**" then "**#**"	You will hear two beeps. Operation successful

5.2 Cancel Auto Lock（MC→#→9→#）

	Operating steps	Locks status
1	Input the "**Master Code**" then "**#**"	You will hear two beeps.
2	Input "**9**" then "**#**" within 10 seconds(before the indicator light extinguishes)	You will hear two beeps. Operation successful

Special note:

There is a button under the knob of back panel, if you press this button, people won't be able to get in even they input the correct code from outside, if you want to quit, just turn the knob once, people from outside will be able to get in with code again.

If there are some people around you while operating the lock, and you don't want to let them know your code. You can input some digits before your code to confuse them. For example, your code is "123456", you can input "5465445"+"123456" to open the lock.

The lock will be blocked for about 5 minutes if you continue to input 3 wrong codes. And it will alarm(beep and flash red for 5 seconds) if the voltage of battery is lower than 4.5V

Program Code List

	Code No.	Function
1	1	Add New User Code
2	2	Delete A User Code
3	3	Delete All User Codes
4	4	Change Master Code
5	5	Add Remote Control
6	6	Delete All Remote Control
7	0	Initialize The Lock

Problem shooting (Customer Service Email: xiongsihong@hotmail.com)

If you failed to program this lock, please contact customer service email, we will reply within 24 hours normally.

Video Instruction

	Video content	link
1	Installation manual for HFAS110BMF/BRM	https://youtu.be/Jb3qoKJV2iM
2	Reset the updated version of HFAS110BMF/BRM	https://youtu.be/Dlt_jAk72x4
3	Program code and remote control for HFAS110BRM	https://youtu.be/6_kApXnnXn8