ring

# Video Doorbell 2

## Home Security Begins at the Front Door

Your new Ring Video Doorbell is the start of a Ring of Security around your entire property.

Now, you'll always be connected to your home, so you can watch over your property and answer the door from anywhere.

See who's at your door, prevent crime and protect your home – all from your phone, tablet or PC.



## Contents

1. Charging

2. In-app Setup

3. Physical Installation

4. Features

5. Troubleshooting

# 1. Charge the provided battery.

## Charge the provided battery

First, fully charge the battery by plugging it into a power source using the provided orange cable.

The small light on top will glow green once fully charged.

= Charging = Charged

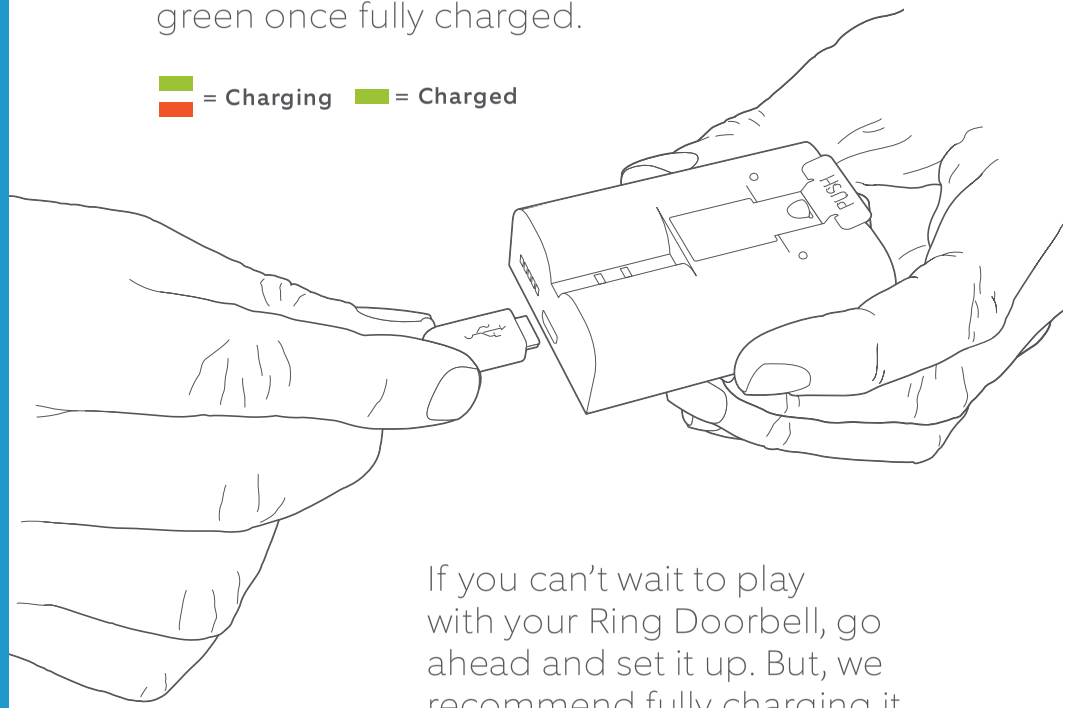


If you can't wait to play with your Ring Doorbell, go ahead and set it up. But, we recommend fully charging it before installation.

## Insert the battery

After charging, insert the battery in the bottom of your Ring Doorbell until it clicks into place.

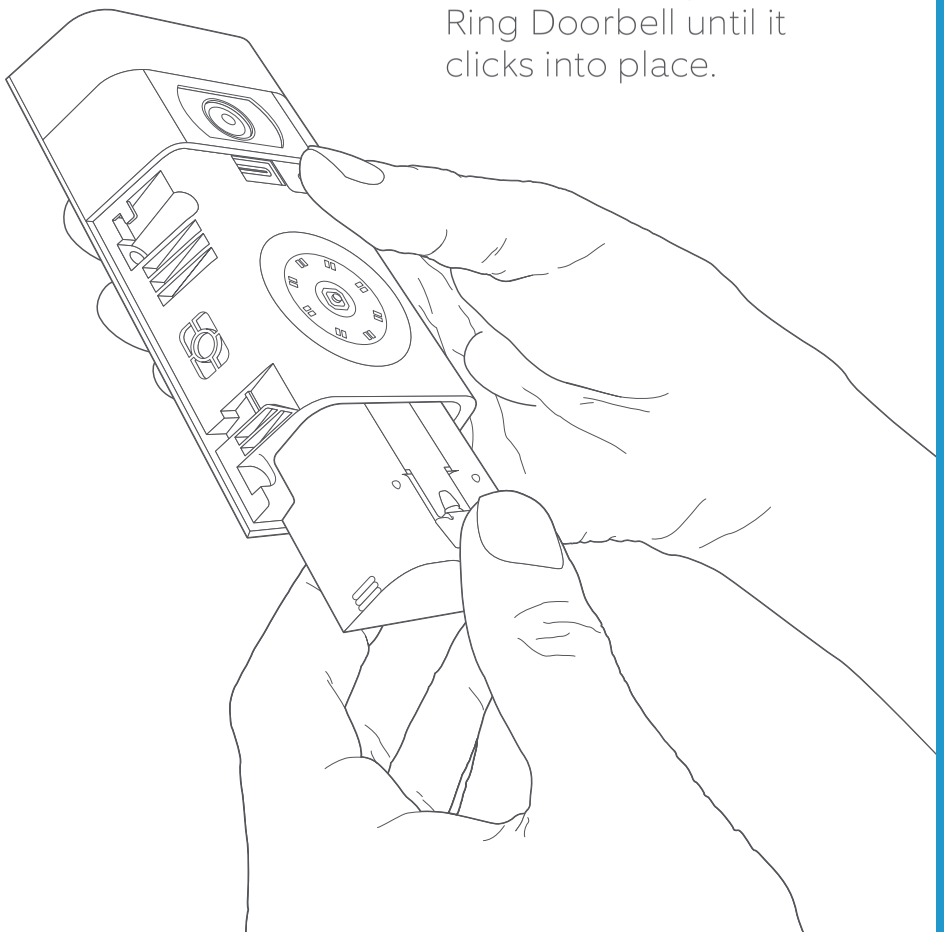

# 2. Set up your Ring Video Doorbell 2 in the Ring app.

## Download the Ring app

The Ring app will walk you through setting up and managing your Ring Doorbell.

Search for “Ring” in one of the app stores below, or visit: ring.com/app.

Download on the App Store | GET IT ON Google play | Download from Windows Store

## Grab your Wi-Fi password

It’s required for the in-app setup. Write it down below so it’s handy when you need it:

Your Wi-Fi password



## Set up your Ring Video Doorbell near your router

In the Ring app, select **Set Up a Device**.

When prompted, select **Ring Video Doorbell 2** and follow the in-app instructions.

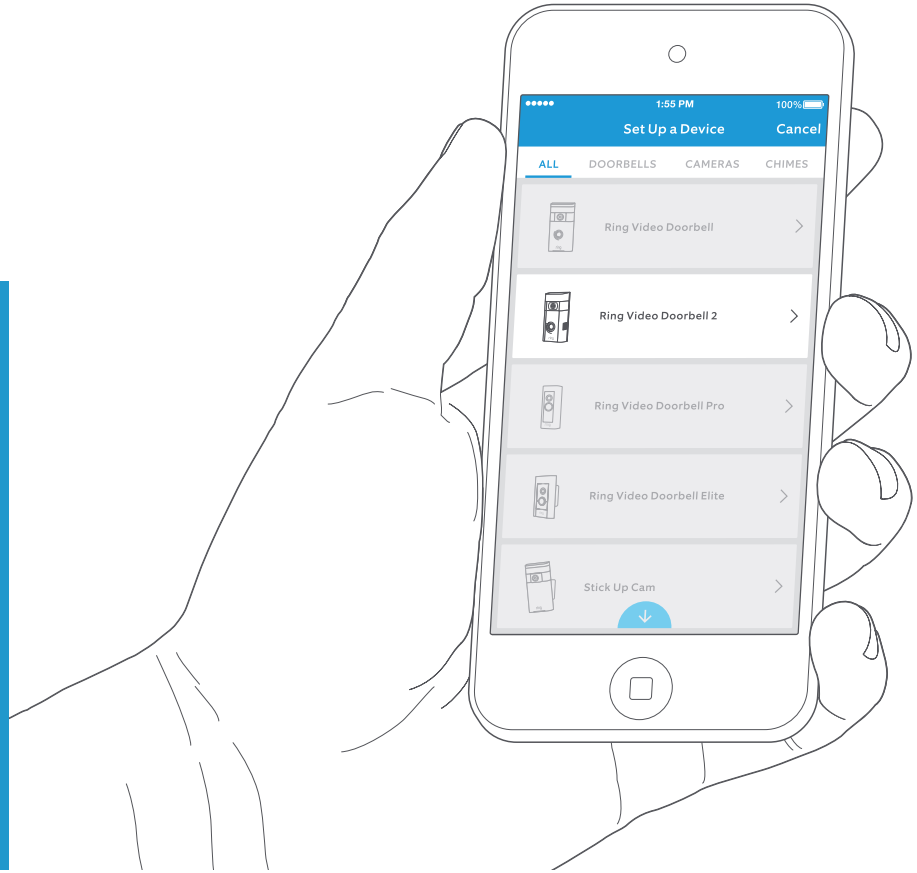

## Try it out!

After setup, push the button on the front of your Ring Doorbell to see video from the camera in the Ring app.

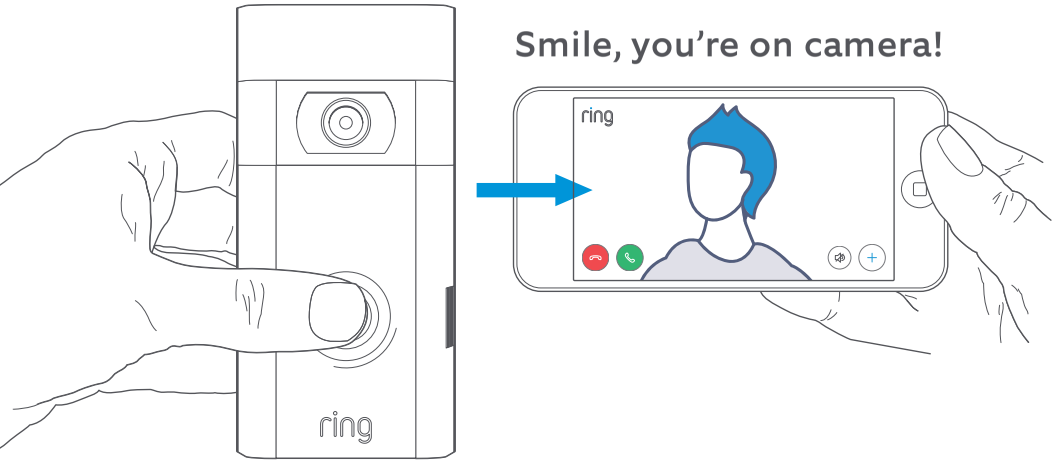


**Next, test video quality where you will install your Ring Doorbell.**

**Everything look good?** Continue to the next section.

**Something not right?** Jump ahead to the troubleshooting section.

# 3. Install your Ring Video Doorbell 2 on the wall.

## Select an install height

Install your Ring Doorbell four feet off the ground for optimal performance.

If you're connecting to existing doorbell wiring that's higher than four feet, thus limiting where you can install Ring Doorbell, use the provided wedge mount to angle your Ring Doorbell down.

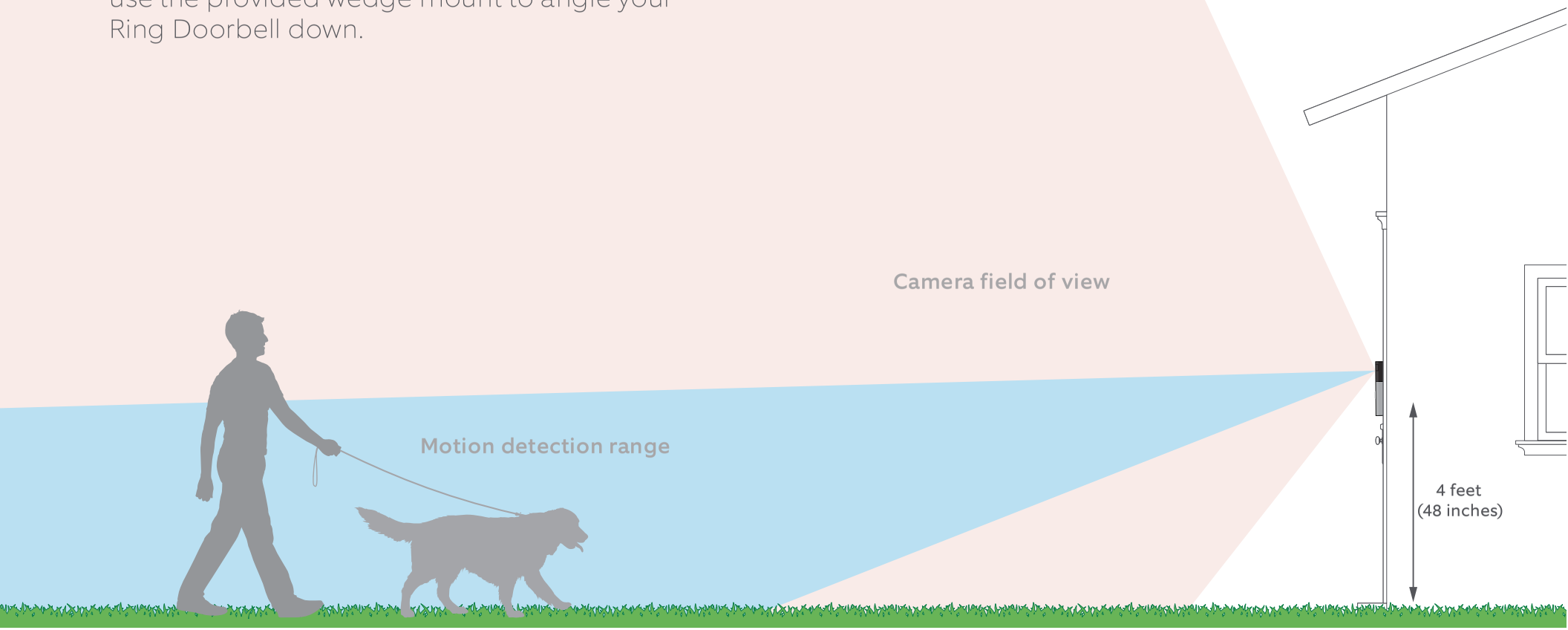

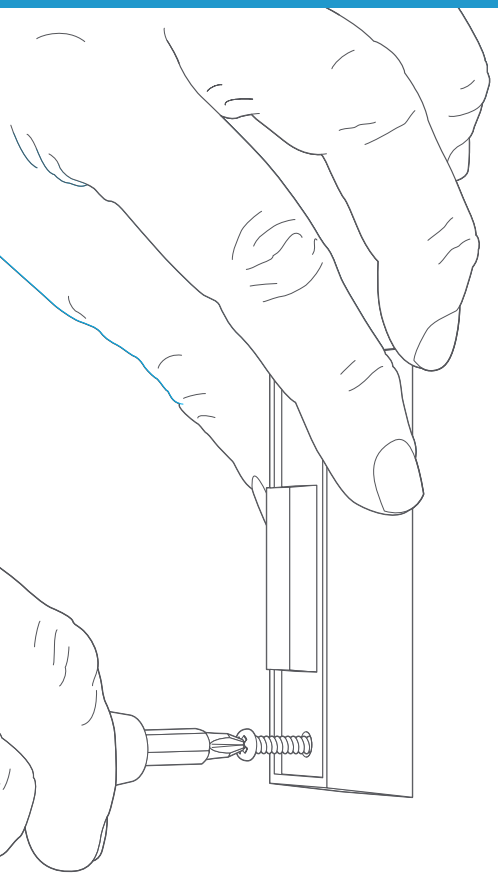

## Remove your existing doorbell (optional)

If replacing an existing doorbell, shut off power at the breaker. Then remove it from the wall and disconnect the wires.

If wiring your Ring Doorbell to an existing doorbell, a transformer with a voltage of 8–24VAC is required. If wiring directly to a transformer, a resistor must be used.

DC transformers and most intercoms are not supported.





## Install the diode (optional)

If you're wiring your Ring Doorbell to a **digital doorbell** – you'll know it's digital if it plays a synthesized melody – then install the included diode.

If your existing doorbell is mechanical, **DO NOT** use the diode, as it can damage your existing doorbell.

Not sure? Visit ring.com/diode

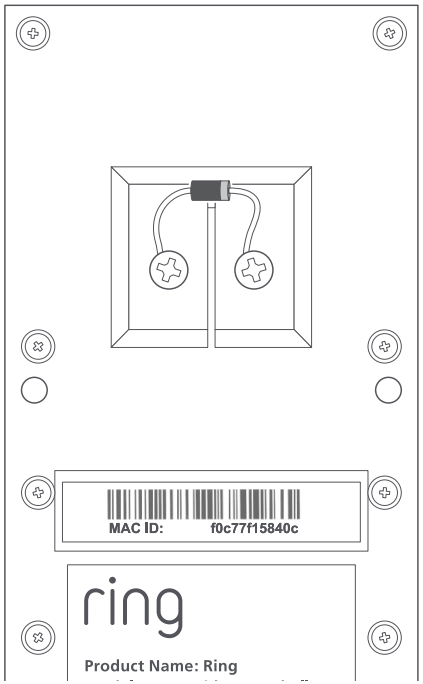


The lighter band on your diode should be on the same side as the wire that runs to the "Front" terminal on your bell.

If you don't know which side this is, don't worry, since wiring the diode the wrong way can't do any harm.

If your bell doesn't ring when pushing the button on your Ring Doorbell, just reverse the wires on the back of your Ring Doorbell and try again.

## Insert the mini-level

Insert the mini-level into your Ring Doorbell to make sure it's even when you install it.

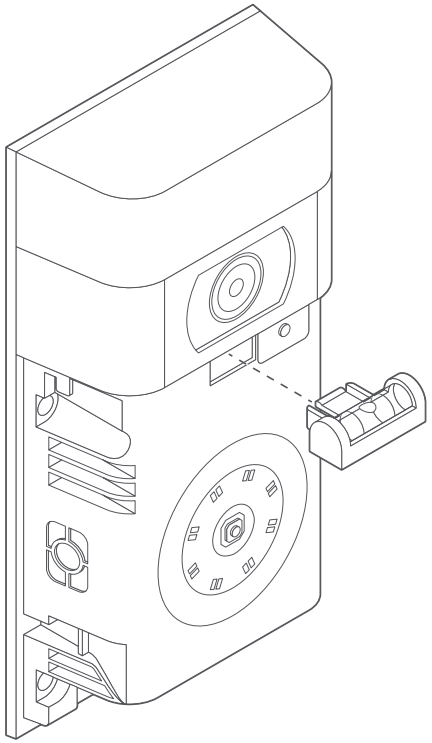

## Install anchors (optional)

If installing on **stucco**, **brick**, or **concrete**, mark 4 drill holes. Use the provided bit to drill holes in your wall and insert the anchors.

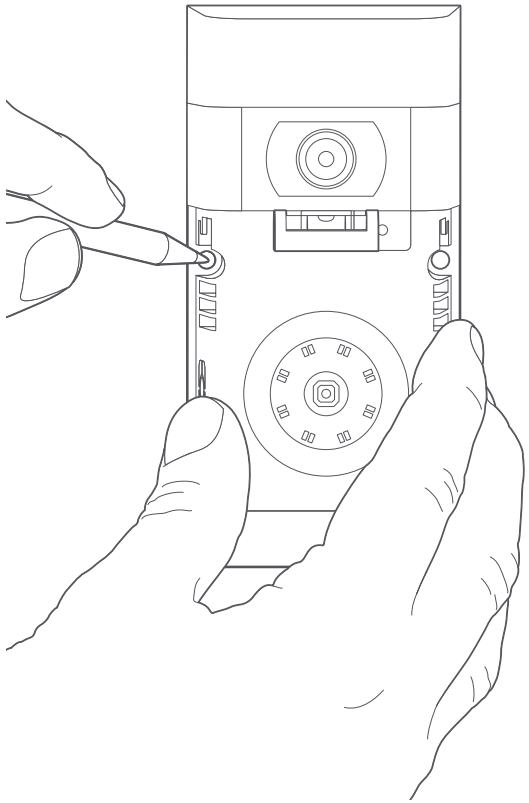

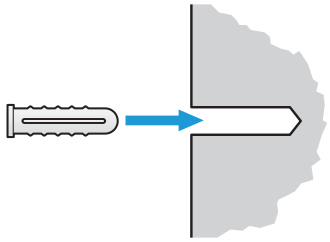

If you're installing on **wood**, skip this step and toss the anchors in that drawer of stuff you never use.

## Connect the Wires (optional)

Connect the wires coming out of your wall to the screws on the back of your Ring Doorbell.

Either wire can connect to either screw. The order doesn't matter.

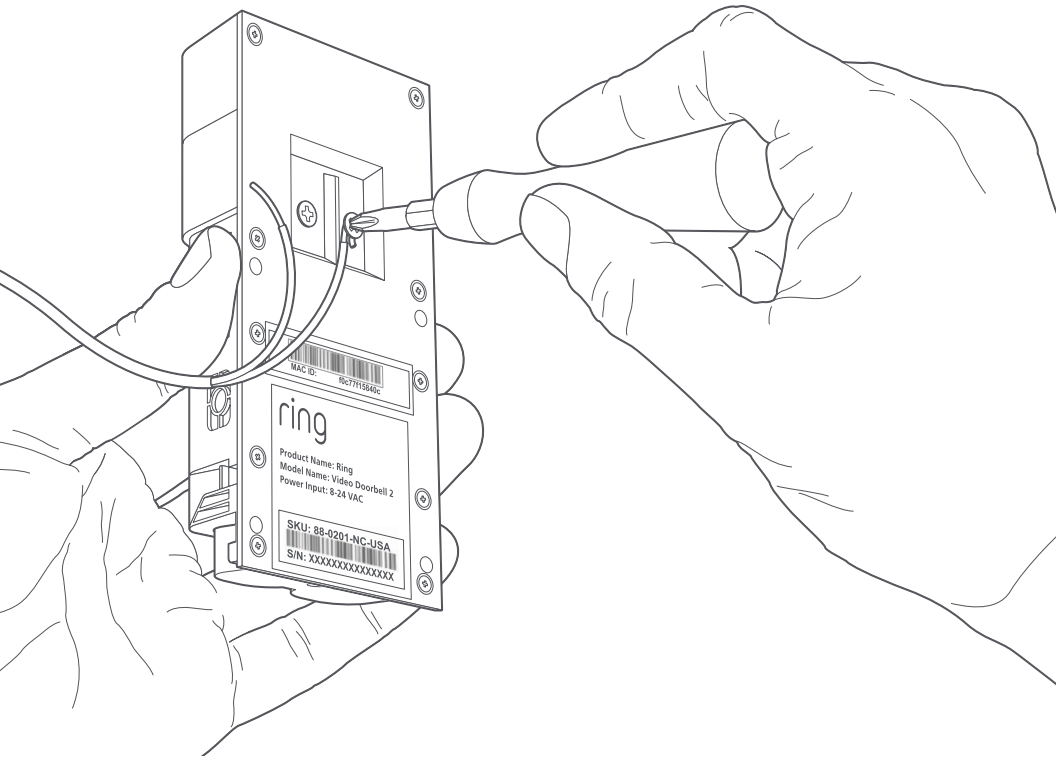






## Attach the wire extensions (optional)

If you have trouble connecting the wires coming out of your wall to the back of your Ring Doorbell, use the provided wire extensions and wire nuts.

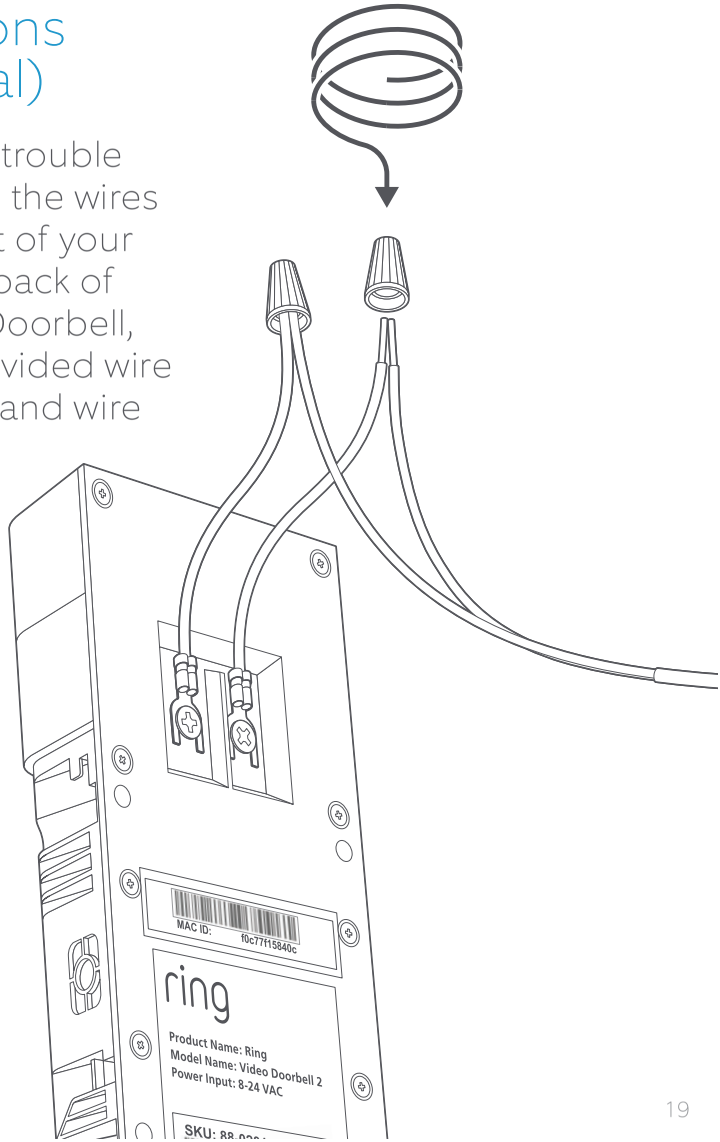

## Screw it in

Feed all the wires (and the wire nuts, if you used them) into your wall and secure your Ring Doorbell on the wall using four screws.

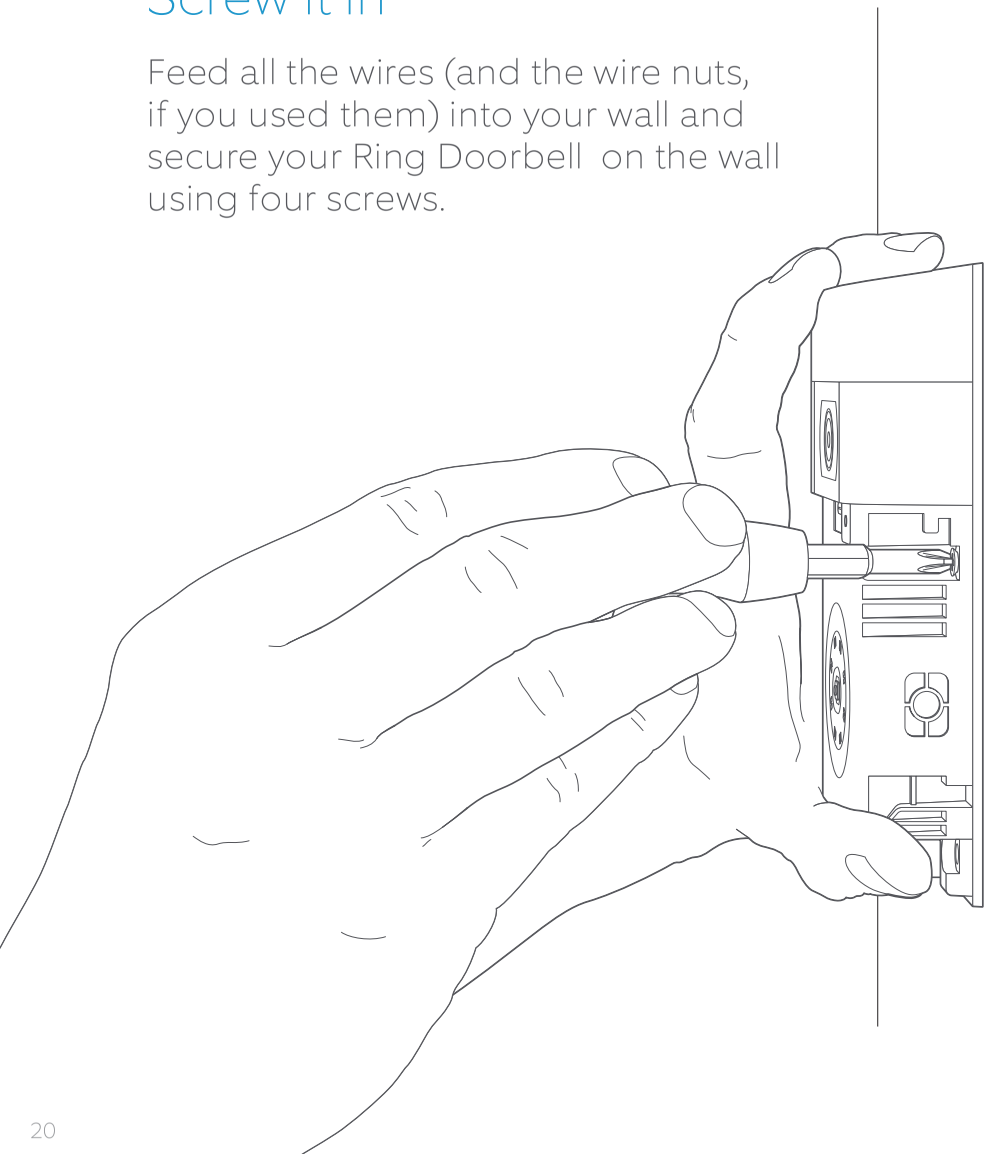



## Install the faceplate

Place one of the provided faceplates on your Ring Doorbell by slotting it in at the top and clicking it into place.

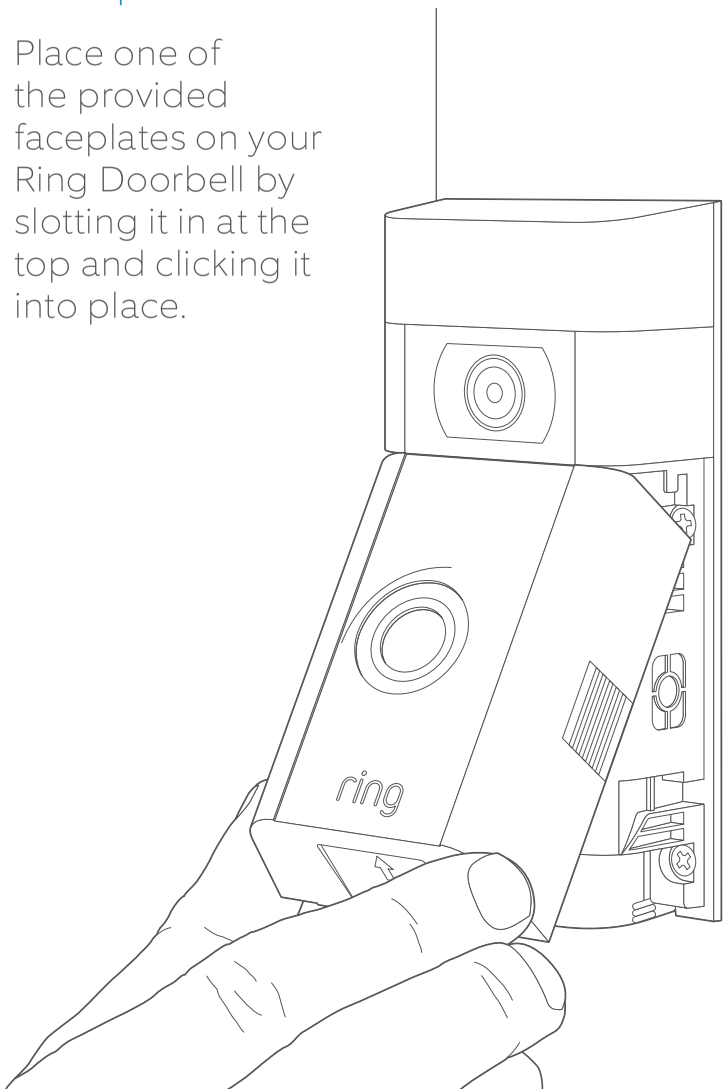

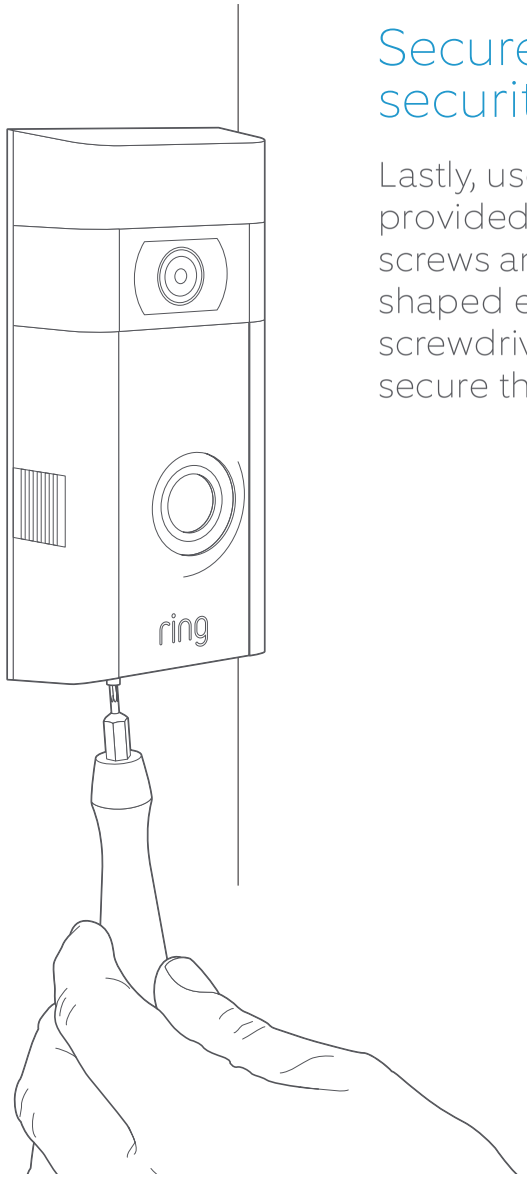


## Secure with a security screw

Lastly, use one of the provided security screws and the star-shaped end of the screwdriver bit to secure the faceplate.

# 4. Check out all the exciting features.

# After setting up your Ring Doorbell in the app, select it

This will bring you to the Device Dashboard, where you can change settings and access various features.

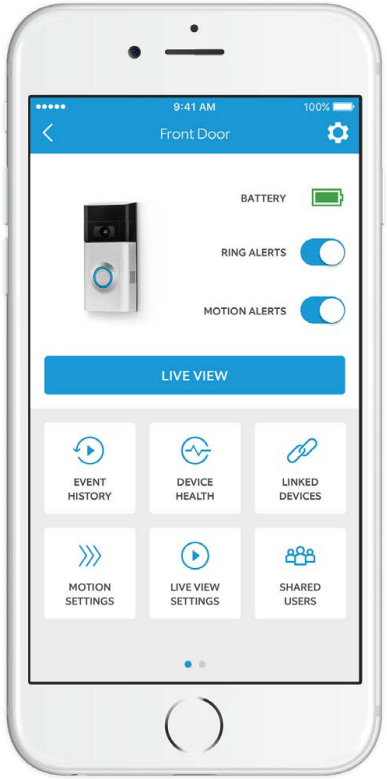


**Ring Alerts** are notifications you receive when someone presses the button on the front of your Ring Doorbell.

**Motion Alerts** are notifications you receive when movement is detected within your Motion Zones.

Switch these alerts on or off on this screen.

**Shared Users**
Select **Shared Users** to let family or friends answer live events and view recordings (if recording is enabled).

**Motion Settings**
Select **Motion Settings** to enable and customize your motion detection settings.

**Device Health**
Visit **Device Health** to diagnose any problems you run into with your Ring Doorbell.

**Event History**
View a log of all the events captured by your Ring Doorbell in **Event History**.

# Answering your door

When someone is at your door, you can access these features:

**Two-way Talk** – Speak to visitors and hear what they have to say.

**Microphone** – Mute or unmute your mic.

**Speaker** – Mute or unmute audio in the app.

**Ring Neighborhoods** – Share suspicious events with your neighbors.



# Ring Video Recording

This optional feature saves recordings of every event your Ring Doorbell captures.

You can access these events on any device running the Ring app or by logging into your account at:
ring.com/activity

Learn more at: ring.com/video-recording

Your new Ring Doorbell includes a free trial of Ring Recording for you to enjoy. Watch your email inbox for important announcements about this service.

# 5. Having trouble?

# Here are some answers...

## I'm having trouble completing the in-app setup

When the in-app setup fails, look at the front of your Ring Doorbell. The light indicates the issue.

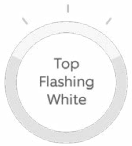


**Top Flashing White** means your Wi-Fi password was entered incorrectly. Select your Wi-Fi network in your phone settings, select the option to forget it, then reconnect to it again to confirm that you're using the correct password during setup.

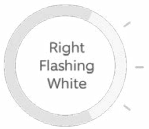


**Right Flashing White** means your Ring Doorbell may be too far from your router to get a decent signal. Repeat setup in the same room as your router. If this works, then you may need to get a Chime Pro to boost the Wi-Fi signal to your Ring Doorbell.

Learn more at: ring.com/chime-pro.

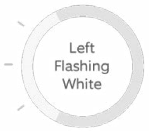


**Left Flashing White** indicates a possible issue with your internet connection. Unplug your modem or router for 40 seconds, plug it back in and then repeat the setup process.

**Spinning White** indicates that your Ring Doorbell is in setup mode. You'll need to follow the instructions in the Ring app. When prompted, connect to the Wi-Fi network being broadcast by your Ring Doorbell.

**Nothing** In this case, repeat setup and note the resulting pattern. If the front light never does anything, then you likely need to charge the battery.

## Why can't I find the temporary Ring network on my phone?

Sometimes your phone fails to pick up the temporary Ring network. If this happens, go to your phone settings, turn off your Wi-Fi connection, wait 30 seconds and turn it back on. If the Ring network still fails to appear, ensure that the battery in your Ring Doorbell is fully charged.

## If none of the above helped...

**Perform a hard reset** on your Ring Doorbell by holding down the setup button for 15 seconds, waiting 30 seconds and repeating the setup process.

**Turn off cellular data and bluetooth** on your mobile device and try again.

Try performing setup **on a different mobile device**.



## Why isn't my internal doorbell ringing properly when someone presses the button on my Ring?

Make sure the circular light on the front of your Ring is glowing white to confirm that it's wired correctly.

If your internal doorbell is digital (which means it produces a synthesized melody), make sure you installed the provided **diode**.

If you have installed the **diode**, it may be installed backwards. Simply reverse the wiring on the back of your Ring Doorbell and press the front button again.

If your internal doorbell is mechanical (which means it has a physical bell and makes a classic "ding dong" sound), then make sure you **didn't** install the diode.

Visit ring.com/diode for installation assistance.

## Why can't visitors hear me on my Ring when I talk through the app?

If you're on an **iPhone or iPad**, check the microphone permission on your device. Select Settings, find Ring and select it. Lastly, make sure the switch next to Microphone is toggled on.

If you're on an **Android** device, go to Settings > Application/Apps > Application Manager > Ring > Permissions. Ensure everything here is on.

If you don't see the Microphone option, then uninstall and reinstall the Ring app. When prompted to allow microphone access, choose "Allow."

## I'm not receiving motion alerts

First make sure you've configured **Motion Detection**, and that **Motion Alerts** are turned on (see pg. 24).

To further troubleshoot issues with not receiving notifications, select **Device Health** in the Ring app and then select **Troubleshoot Notifications**.

## Why is my video and/or audio quality poor?

First, determine the cause. Remove your Ring Doorbell and bring it inside near your router. Press the front button on your Ring Doorbell and look at the video in the Ring app.

If you get good video quality near the router, you need to extend your Wi-Fi signal.

We recommend **Chime Pro** to boost the signal to your Ring Doorbell. Learn more at: ring.com/chime-pro.

If video quality is still poor near your router, test your internet speed by selecting **Device Health** in the Ring app, then **Test Your Wi-Fi**.

The instructions in the app will help you diagnose and solve any issues related to poor video quality.

© 2017 Bot Home Automation, Inc.
RING, ALWAYS HOME, and CHIME are trademarks of Bot Home Automation, Inc.
Last updated: 06/15/17