FITNESS REALITY®
Real People Real Results

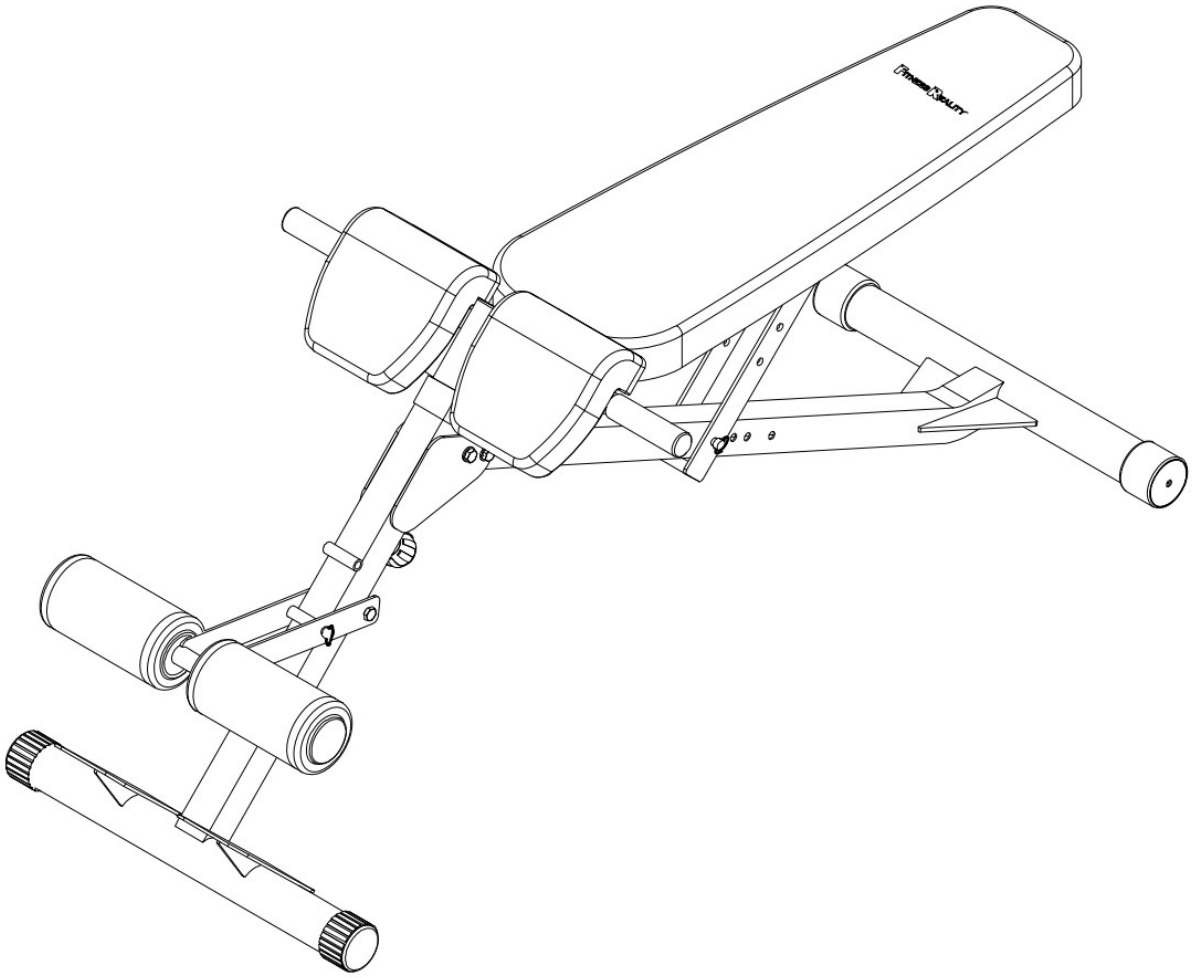

AB Hyper Bench

IMPORTANT: Read all instructions carefully before using this product. Retain this owner's manual for future reference. The specifications of this product may vary from this photo and, subject to change without notice.

Owner's Manual

PLEASE DO NOT RETURN THIS PRODUCT TO THE STORE.

STOP. Contact customer service if you have any questions regarding assembly or proper operation of the machine.

Email us at:

Service@paradigmhw.com

Or call us at:

1-844-641-7920

Hours:

8:00 am to 5:00 pm (PST) Daily

TABLE OF CONTENTS

SERVICE---------- 2

LABEL PLACEMENT---------- 3

PRODUCT SAFETY---------- 4

ASSEMBLY PREPARATION---------- 5

OVERVIEW---------- 6

HARDWARE PACK---------- 7

PART LIST---------- 8

STEP 1---------- 10

STEP 2---------- 12

STEP 3---------- 14

STEP 4---------- 16

STEP 5---------- 18

STEP 6---------- 20

ADJUSTMENTS---------- 22

WARRANTY---------- 23

PART REQUEST FORM---------- 24

IMPORTANT: FOR NORTH AMERICA ONLY

For damaged or defective product, questions, replacement parts or any other service support, please contact our customer service department by the below methods:

For The Best Service, please Email:
service@paradigmhw.com

Response Time: 1-2 Business Days

Emailing us with the information above will be the best method to receive a response during peak business hours

Website:
www.paradigmhw.com

Toll-Free:

1-844-641-7920

(8:00 AM - 5:00 PM Pacific Standard Time, Daily)

Response time may vary via calling

Please have the following information ready when requesting for service:

- **Your name**
- **Phone number**
- **Model number**
- **Serial number**
- **Part number**
- **Proof of Purchase**

For damaged or defective product please contact our customer service before returning to the store.

Paradigm Health & Wellness, Inc.
1189 Jellick Ave.
City of Industry, CA 91748, USA

LABEL PLACEMENT

PRODUCT SAFETY

WARNING: Before using this equipment you should consult with your personal physician to see if AB Hyper Bench is appropriate for you. Do not use this equipment without your physician's approval. Do not use this equipment if you have any of the following conditions or ailments:

- Extreme obesity
- Glaucoma, retinal detachment or conjunctivitis
- Pregnancy
- Spinal injury, Cerebral Sclerosis, or acutely swollen joints
- Middle ear infection
- High blood pressure, Hypertension, Recent stroke or Transient ischemic attack
- Heart or circulatory disorders for which you are being treated
- A hiatus hernia or a ventral hernia
- Bone weaknesses including Osteoporosis, Unhealed fractures, Modularly pins, or Surgically implanted orthopedic supports
- Use of anticoagulants including Aspirin in high doses

The Maximum Weight Capacity for this product is 650lbs/295kgs.

Read all instructions carefully before assembling or operating this product. Retain this owner's manual, do not remove any safety labels from the machine and keep the original purchase receipt for future reference.

This Bench was designed and built for optimum safety. However, certain precautions apply whenever you operate this exercise equipment. Be sure to read the entire manual before assembling and operating this equipment. Also, please note the following safety instructions:

1. Consult your physician or other health care professionals before using the Bench.
2. Always wear proper exercise apparel when using this equipment. Use care when getting on or off the unit.
3. If anytime you feel faint, light-headed, or dizziness while operating the equipment, stop exercising immediately and contact your physician. You should also stop exercising if you are experiencing pain or any kind of discomfort.
4. Keep children and pets away from this equipment at all times.
5. Only one person should use this equipment at a time.
6. Make sure your equipment is correctly assembled before you use it. Be sure all screws, nuts, and bolts are tightened prior to use.
7. Do not operate this or any exercise equipment if it is damaged.
8. Wait 2 hours after eating before using this exercise equipment. If you get nauseous, stop exercising as soon as you feel queasy.
9. Always use this equipment on a clear and level surface. Do not use outdoors or near water.
10. Keep hands and feet away from any moving parts. Do not insert any object into any openings.
11. Keep loose clothes, jewelry, limbs and long hair away from moving parts.
12. Children under the age of 12 should not use this fitness equipment.

ASSEMBLY PREPARATION

Warning: It is highly recommended that you have assistance during the assembly of this strength equipment.

1. Tools for assembly:

   General tools needed for the assembly of this strength equipment:

   - Metric Allen Key Set
   - Metric Wrench Set and Adjustable Wrench
   - Flat Screwdrivers
   - Phillips Screwdrivers
   - Rubber Mallet
   - Silicone Spray Oil
2. Insert the bolts into the frame as illustrated in the drawing of each of the steps.
3. Hand-tighten the bolts, nuts, and screw during assembly. Hand-tightening will allow for easily aligning the parts during assembly. Tighten all the hardware once the entire unit has been completely assembled.
4. It is highly recommended that a professional installer assembles the strength equipment. But, with the proper assistance, the right tools, and strictly following the assembly steps, and given enough time; the assembly of the unit can be achieved without professional help.
5. Thoroughly read each step before proceeding to assemble the items of that step.
6. To aid in assembly of the equipment, the hardware (bolts, nuts, washer…etc.) has been presorted according to their corresponding steps. **Each bag of hardware is labeled with its corresponding step number.**
7. When the equipment is fully assembled check all the functions for correct operation. Consult the manual if you experience any issues, or for further help please contact our service department. See page 2.

OVERVIEW DRAWING

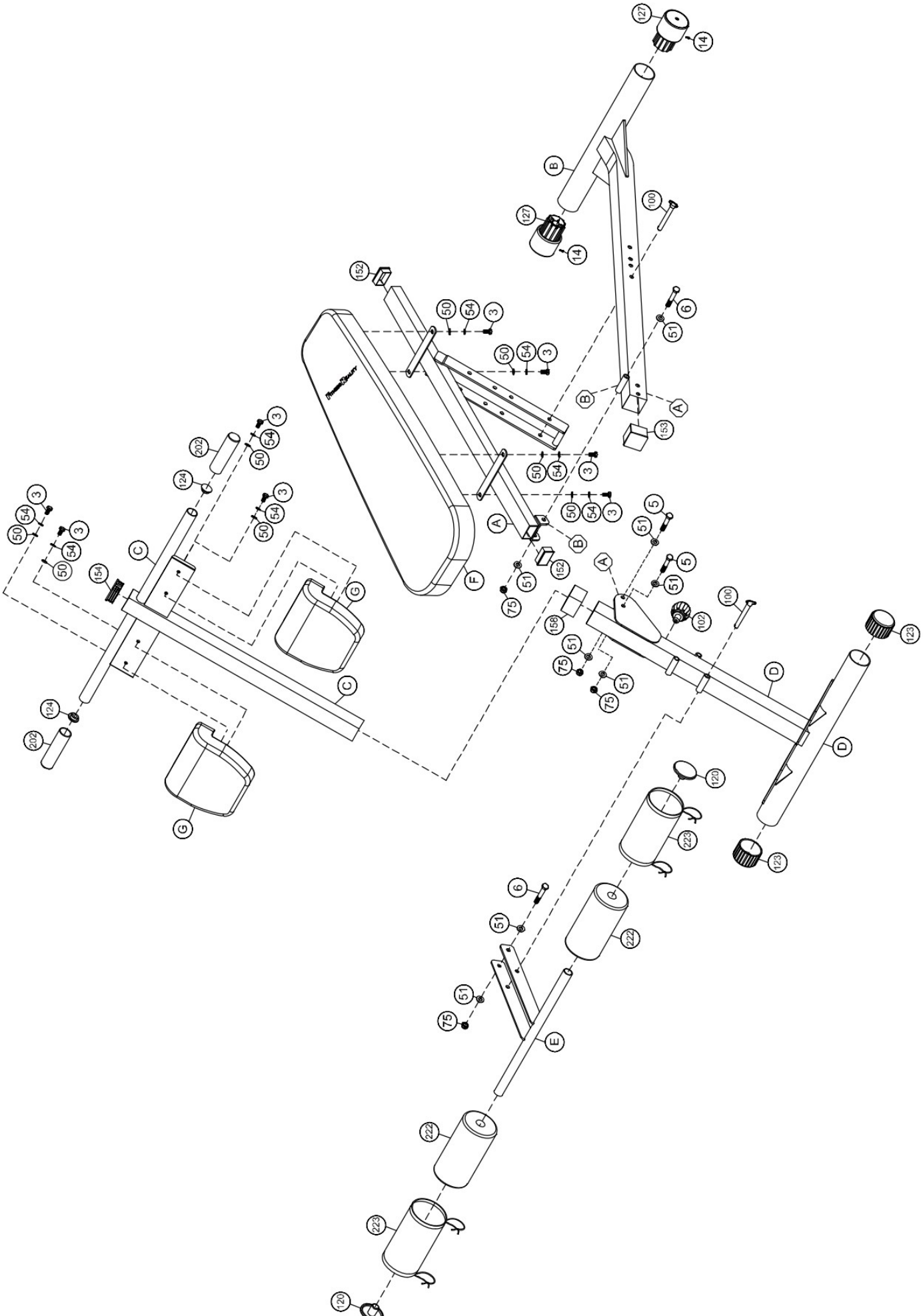

HARDWARE PACK

Step-1

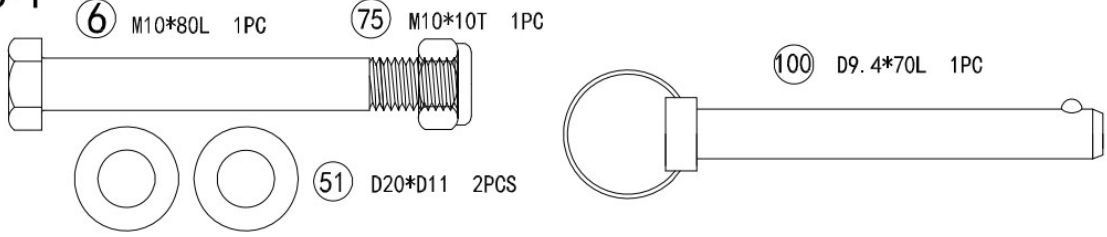

Step-2

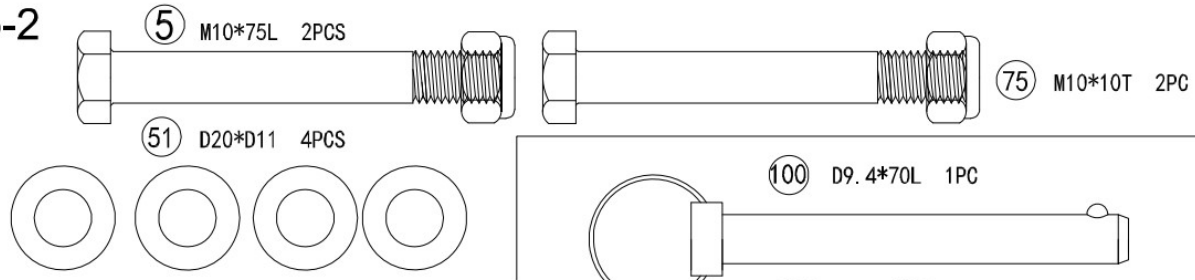

Step-3

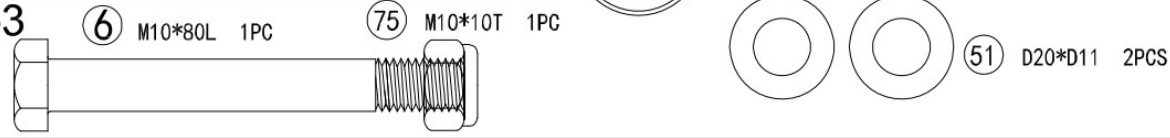

Step-4

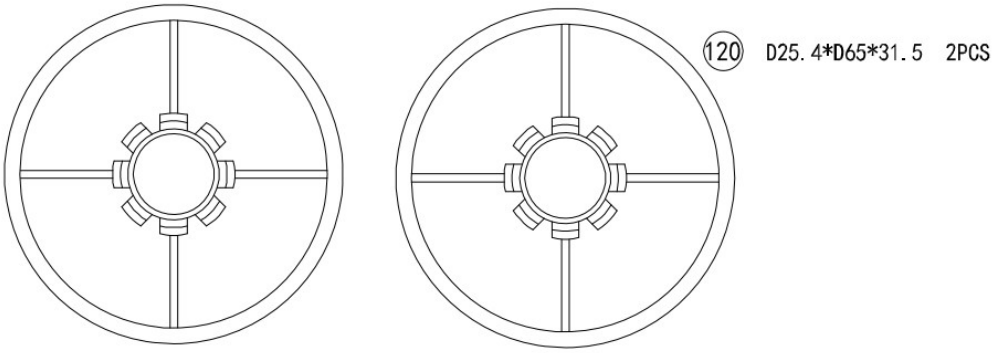

Step-5

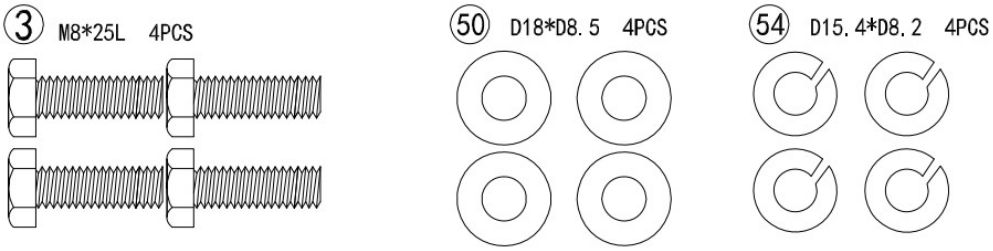

Step-6

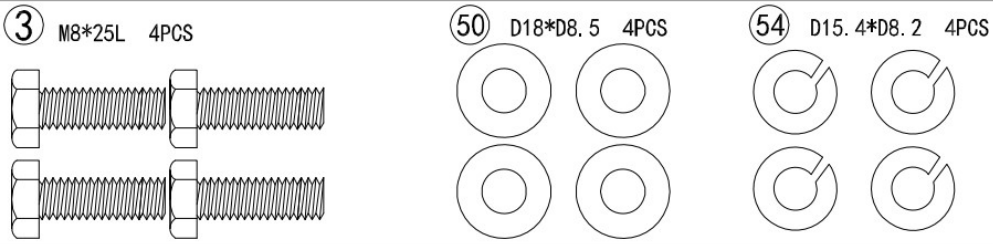

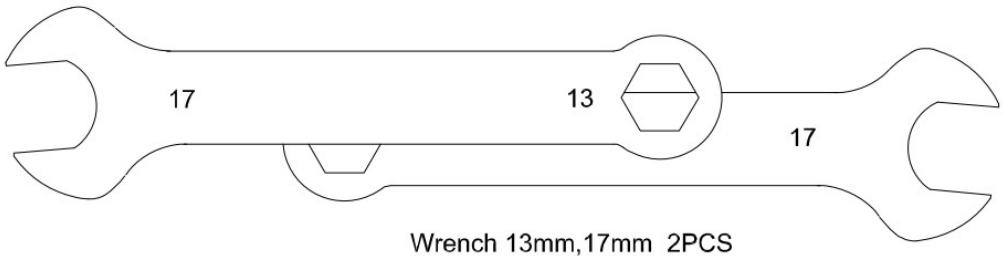

Wrench 13mm,17mm 2PCS

(MM)

PART LIST

Part#	Description	Qty.
A	Backrest Support Tube	1
B	Rear Support Tube	1
C	Handle Grip Tube	1
D	Front Support Tube	1
E	Swing Tube	1
F	Backrest Pad 900x300x60T	1
G	Support Pad 200x200x50T	2
3	Hex Bolt M8x1.25x25L	8
5	Hex Bolt M10x1.5x75L	2
6	Hex Bolt M10x1.5x80L	2
14	Screw ST4x1.41x15L	2
50	Flat Washer D18xD8.5x1.2T	8
51	Flat Washer D20xD11x2T	8
54	Spring Washer D15.4xD8.2x2T	8

Part#	Description	Qty.
75	Nylon Nut M10x1.5x10T	4
100	Pin D9.4x70	2
102	Ball Knob D50xM16x22xD8	1
120	Round Cap D25.4xD65x31.5	2
123	Round Cap D60xD67x43L	2
124	Round Cap D31.8x19L	2
127	ROUND CAP D60xD70x101L	2
152	Square Cap 30x50x18	2
153	Square Cap 50x50x20L	1
154	Square Cap 44x44x16L	1
158	Hollow Cap 55*55*46*46*36.5	1
202	Handle Grip D30x3Tx140L	2
222	Foam Rollers D23xD100x200L	2
223	Foam Roller Sleeve	2

This page was intentionally left blank

STEP 1

1A. Slide the **Rear Support Tube (B)** through the bracket of the **Backrest Support Tube (A)**. Fasten the **Rear Support Tube (B)** to the **Backrest Support Tube (A)** using:

1 - (6) Hex Bolt M10x1.5x80L
2 - (51) Flat Washer D20xD11x2T
1 - (75) Nylon Nut M10x1.5x10T

1B. Align the adjustment holes on the **Backrest Support Tube (A) with Rear Support Tube (B)** and lock the two parts into place using:

1 - (100) Pin D9.4x70

Thoroughly tighten the hardware once complete

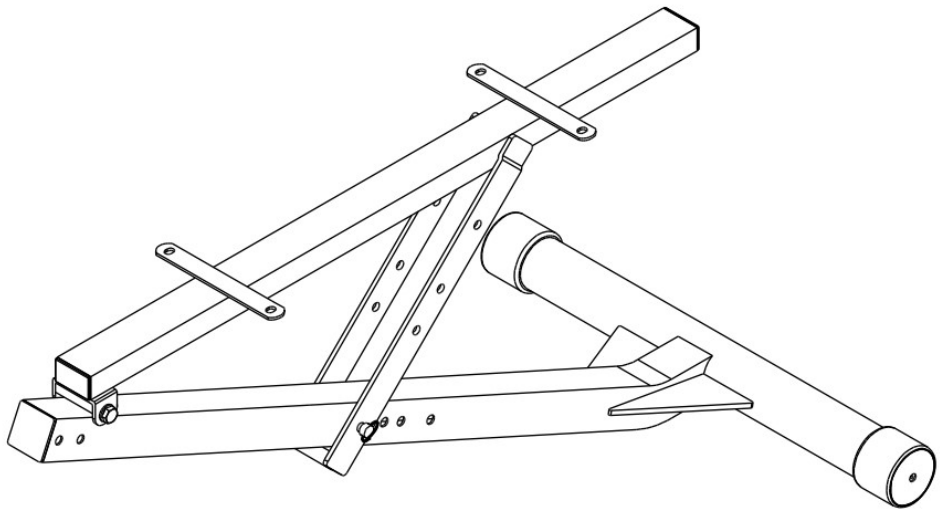

Appearance upon completion of step 1.

STEP 1

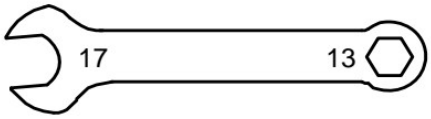

Wrench 2 PCS

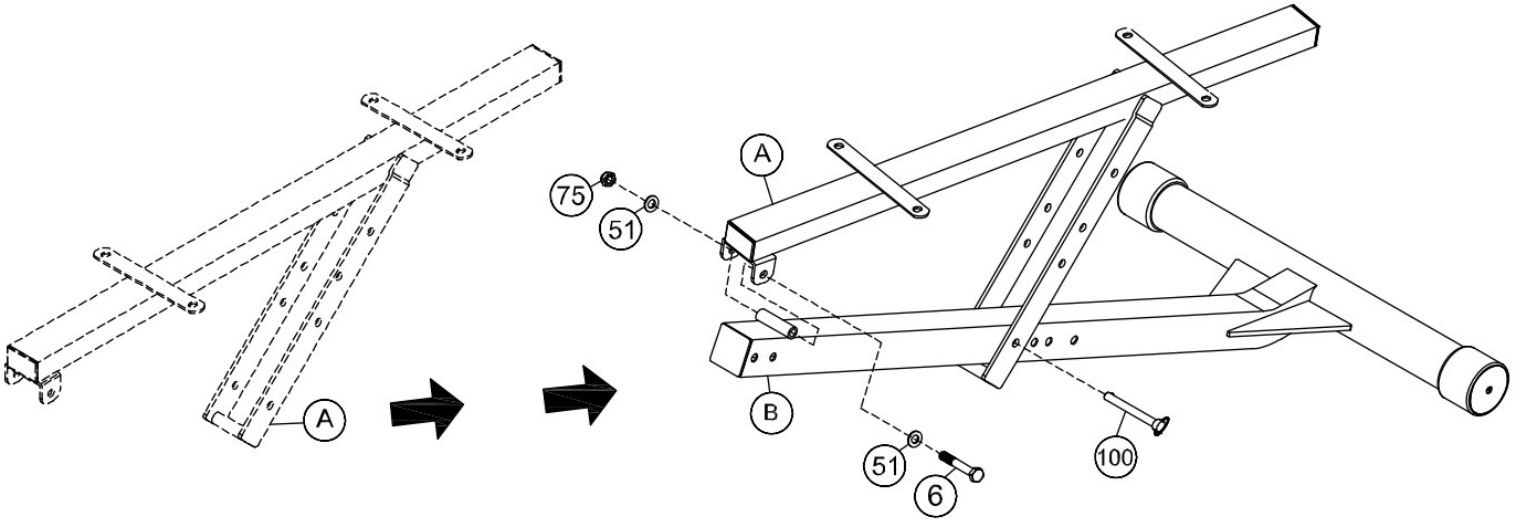

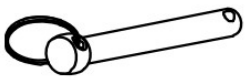

NO. 100 PIN
D9.4x70 1PC

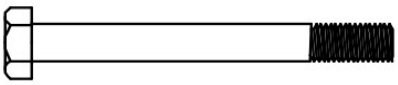

NO.6 Hex Bolt
M10x1.5x80L
1PC

NO. 75 Nylon Nut
M10x1.5x10T
1PC

NO.51 Flat Washer
D20xD11x2T
2PCS

STEP 2

2A. Insert the **Rear Support Tube (B)** into the bracket of **Front Support Tube (D)** by aligning the two holes and fasten together using:

2 - (5) Hex Bolt M10x1.5x75L
4 - (51) Flat Washer D20xD11x2T
2 - (75) Nylon Nut M10x1.5x10T

Thoroughly tighten the hardware once complete

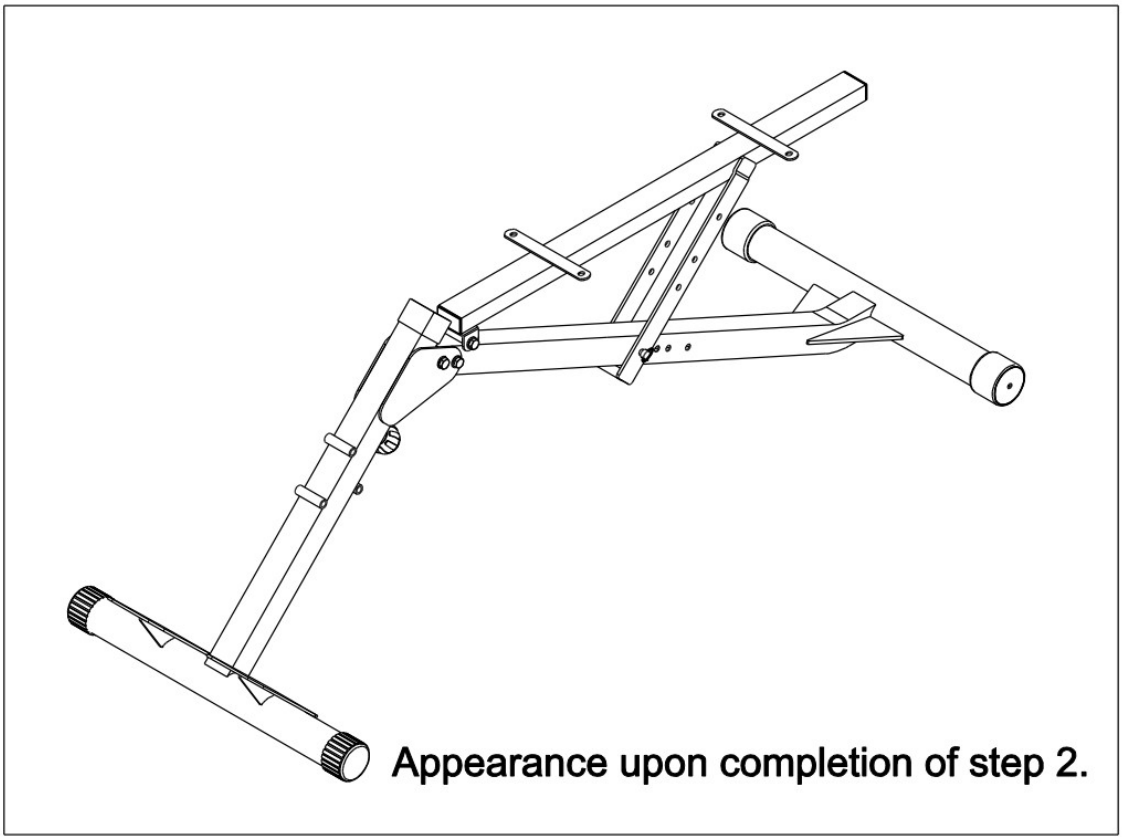

STEP 2

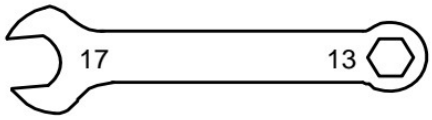

Wrench 2 PCS

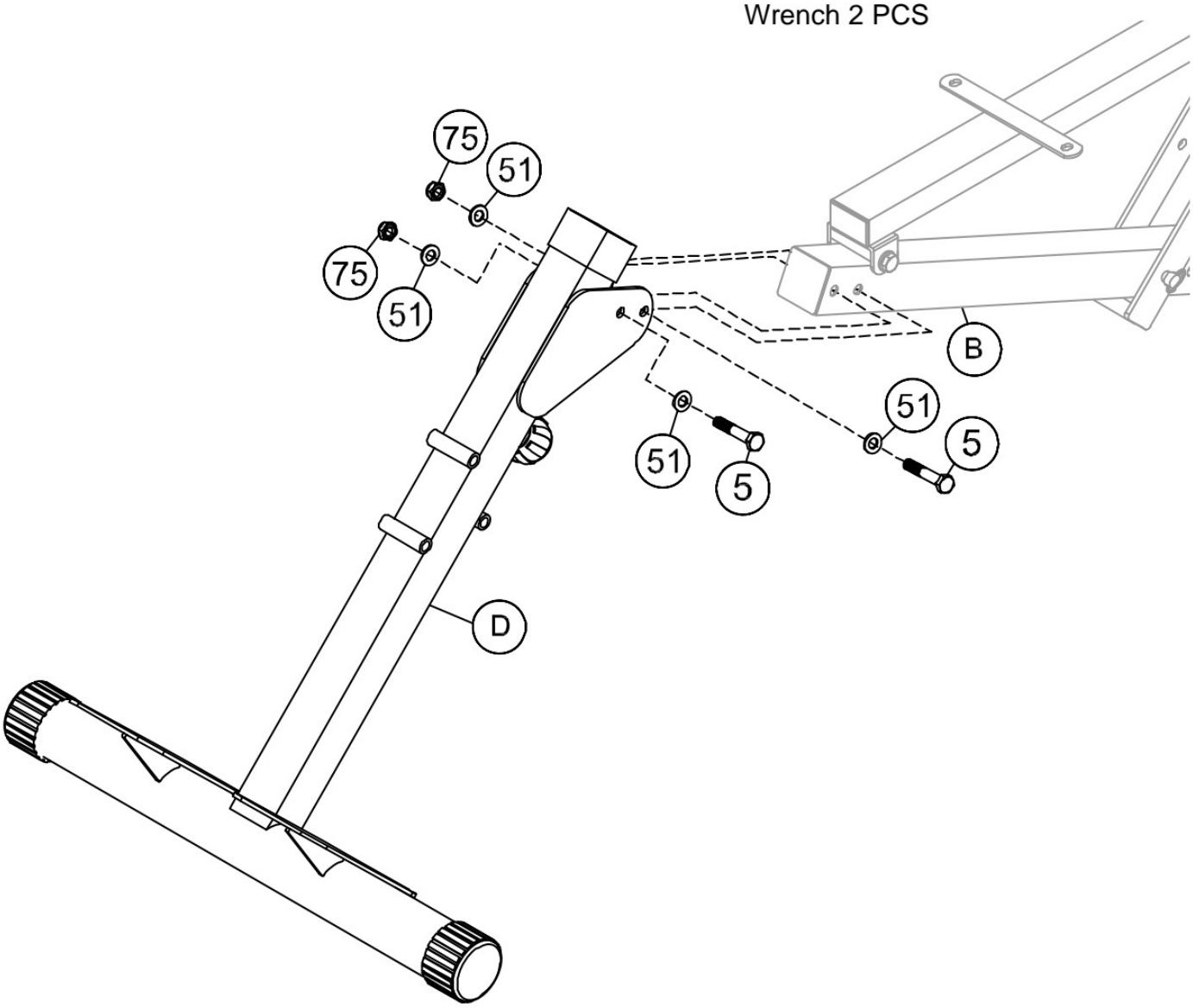

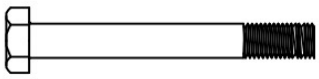

NO. 5 Hex Bolt
M10x1.5x75L
2PCS

NO.51 Flat Washer
D20xD11x2T
4PCS

NO. 75 Nylon Nut
M10x1.5x10T
2PCS

STEP 3

3A. Fasten the **Swing Tube (E)** to hole on the underside of **Front Support Tube (D)** using:

1 - (6) Hex Bolt M10x1.5x80L
2 - (51) Flat Washer D20xD11x2T
1 - (75) Nylon Nut M10x1.5x10T

3B. Align the Swing Tube (E) to the adjustment holes on the front of Front Support Tube (D) and lock the two parts in place Using:

1 - (100) Pin D9.4x70

Thoroughly tighten the hardware once complete

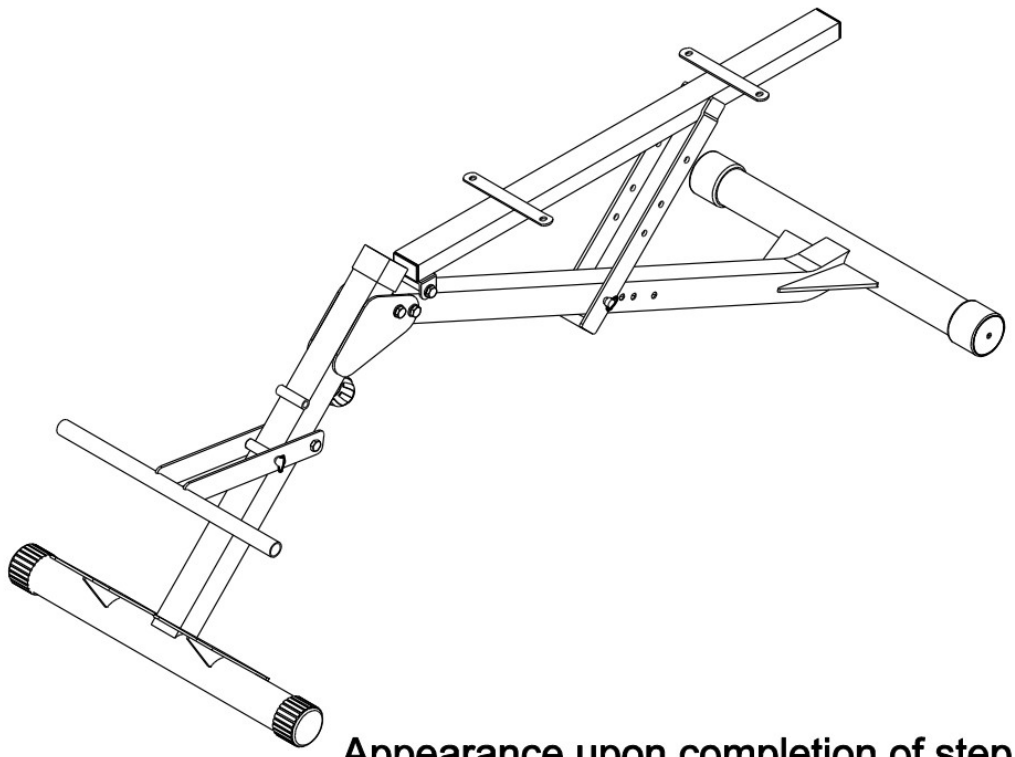

Appearance upon completion of step 3.

STEP 3

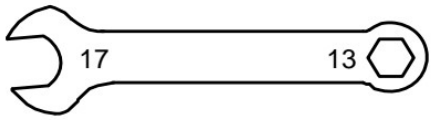

Wrench 2 PCS

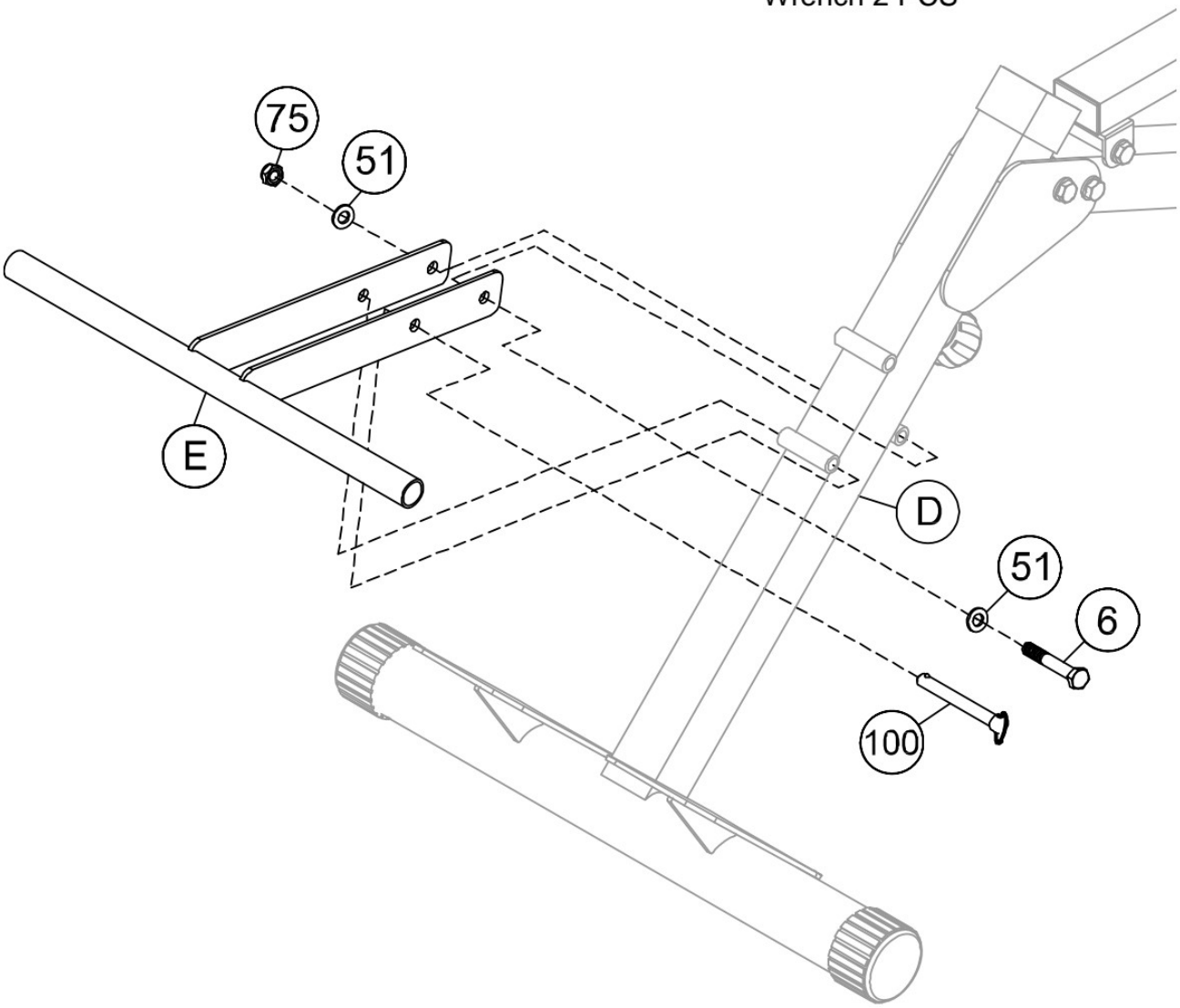

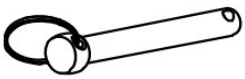

NO. 100 PIN
D9.4x70 1PC

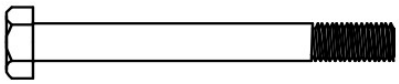

NO. 6 Hex Bolt
M10x1.5x80L
1PC

NO. 75 Nylon Nut
M10x1.5x10T
1PC

NO.51 FLAT Washer
D20xD11x2T
2PCS

STEP 4

4A. Insert Handle Grip Tube (C) into the Square shaft of the Front Support Tube (D). Lock the Handle Grip Tube into place using the Ball Knob (102) located on the underside of the Front Support Tube (D).

4B. Mount the Foam Roller (222) with the Foam Rollers Sleeves (223) onto the posts of the Swing Bar (E). Lock the Foam Rollers (222) into place by inserting Round Cap (120) into the post holes of the Swing Tube (E) using:

2 - (222) Foam Rollers D23xD100x200L
2 - (223) Foam Roller Sleeve (ALREADY INSTALLED ON PART 222)
2 - (120) Round Cap D25.4xD65x31.5

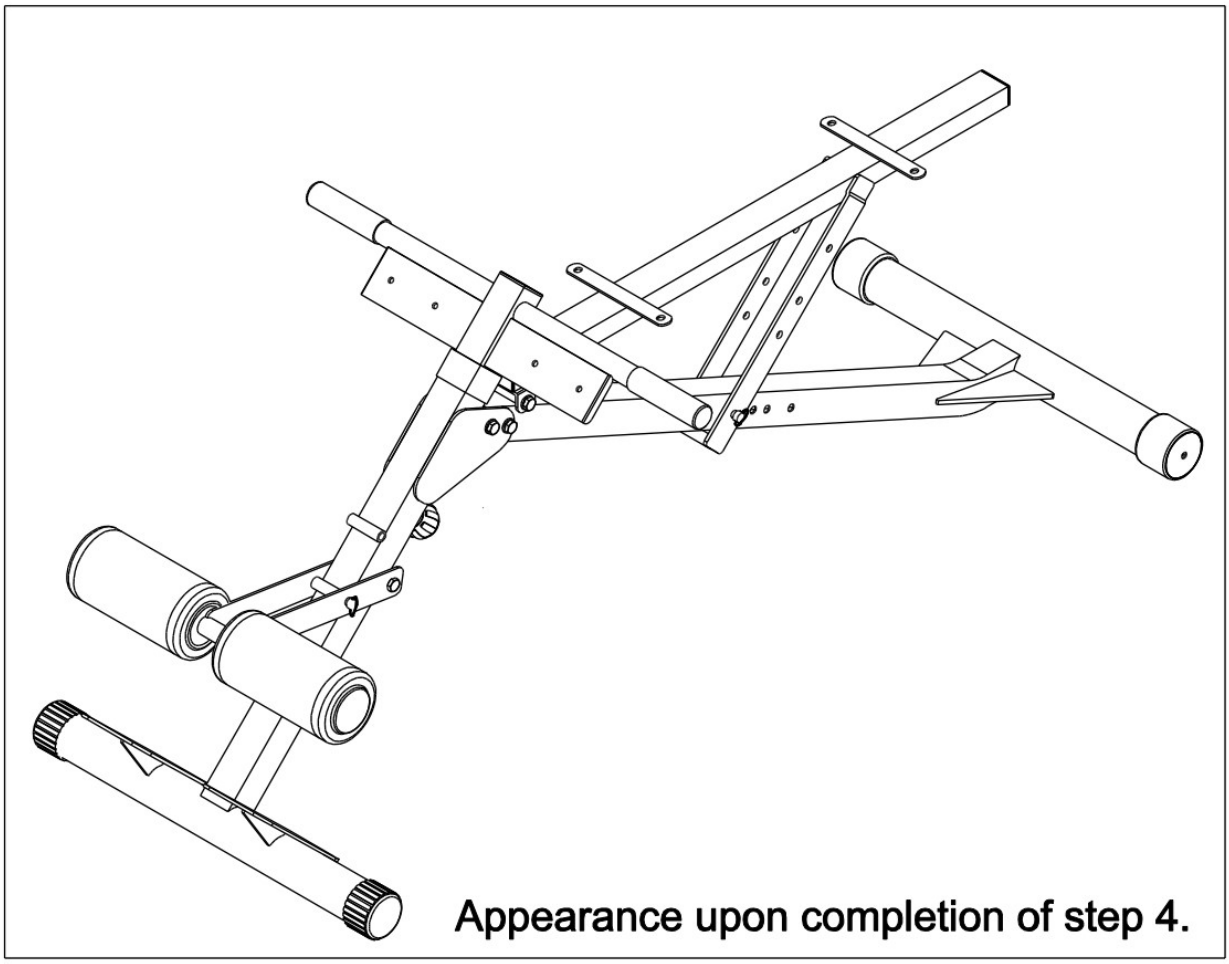

Appearance upon completion of step 4.

STEP 4

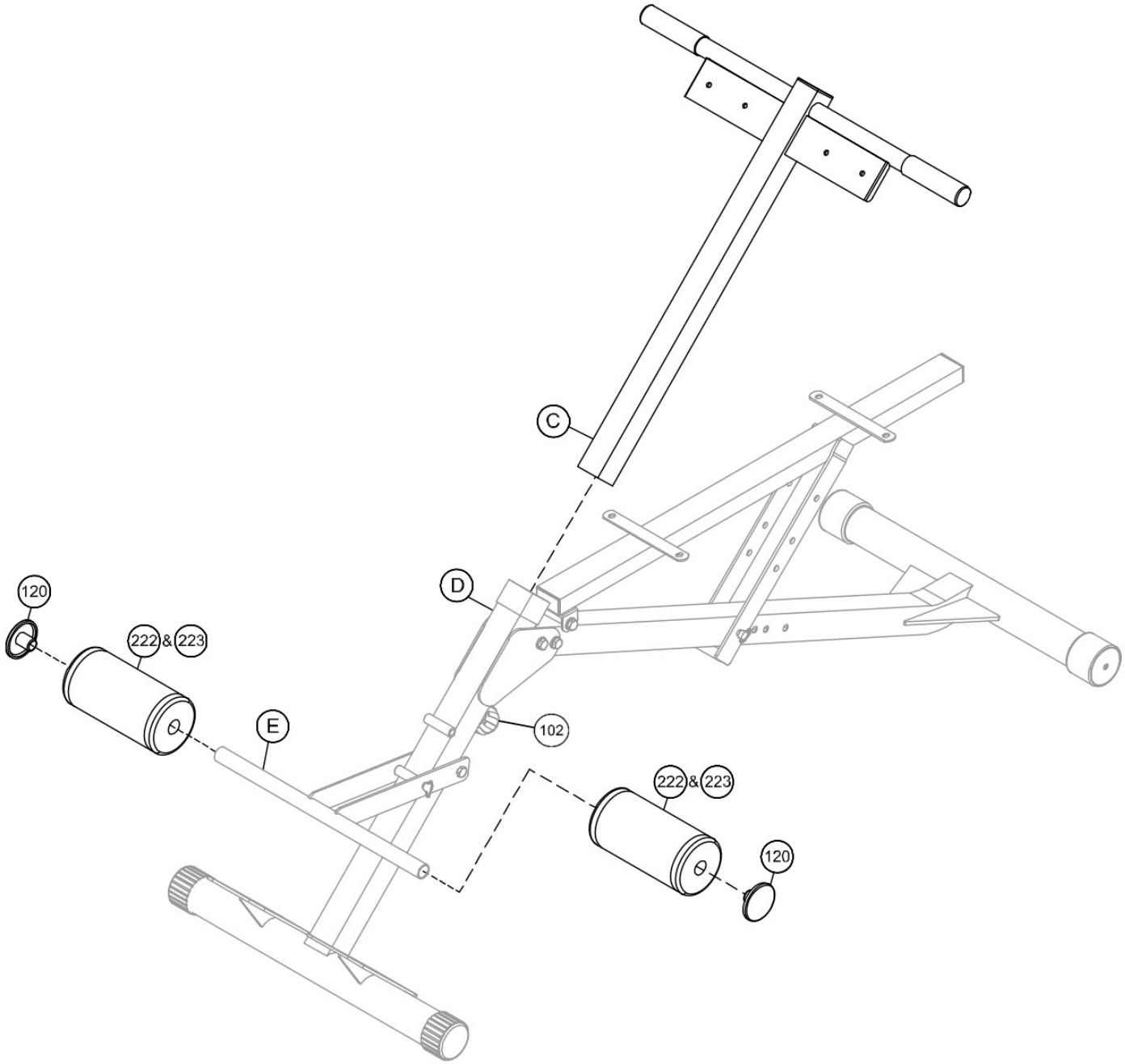

NO.120 Round Cap
D25.4xD65x31.5
2PCS

STEP 5

5A. Attach both Support Pads (G) to Handle Grip Tube (C) using:

4 - (3) Hex Bolt M8x1.25x25L
4 - (50) Flat Washer D18xD8.5x1.2T
4 - (54) Spring Washer D15.4xD8.2x2T

Note: loosely install all the hardware by hand prior to tightening with tools. This will make aligning the holes easier

Thoroughly tighten the hardware once complete

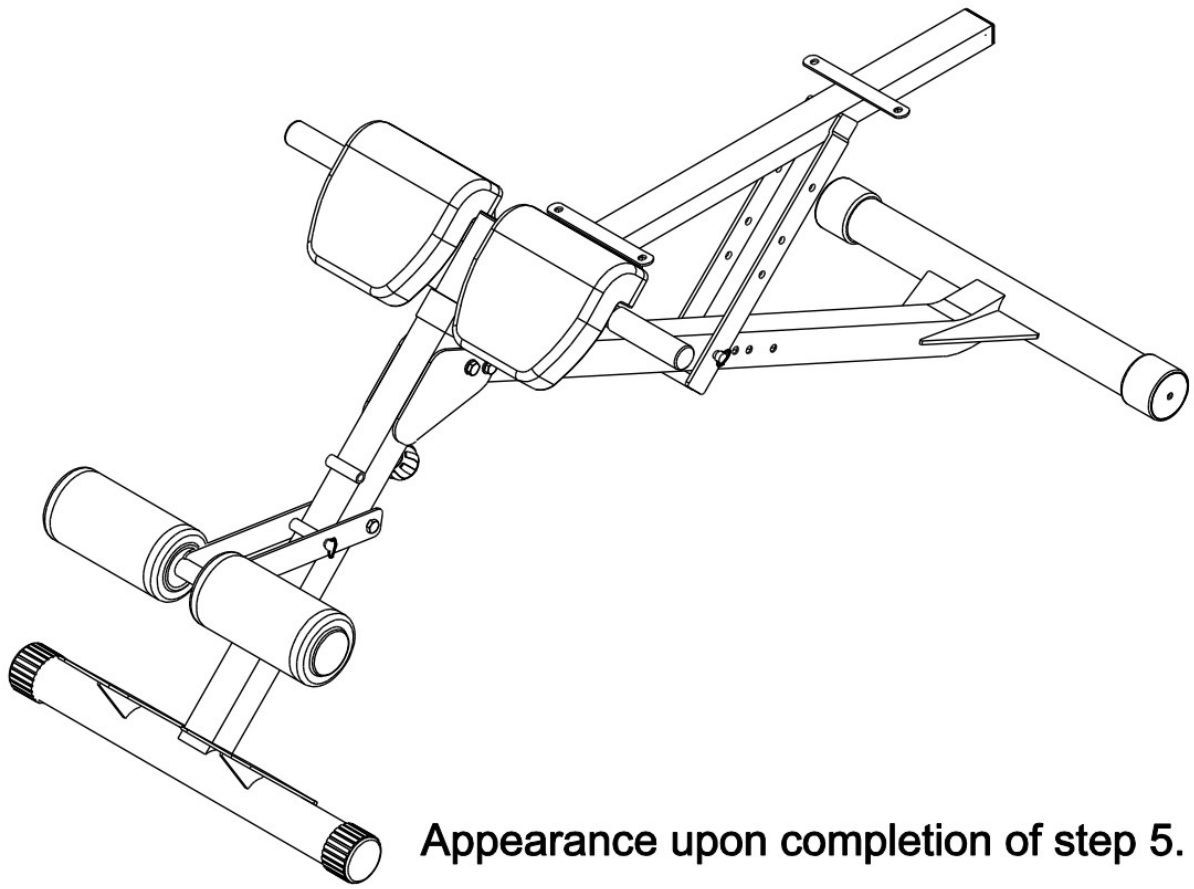

Appearance upon completion of step 5.

STEP 5

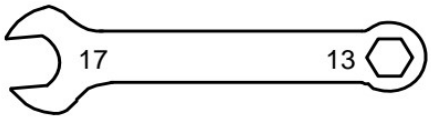

Wrench 1PC

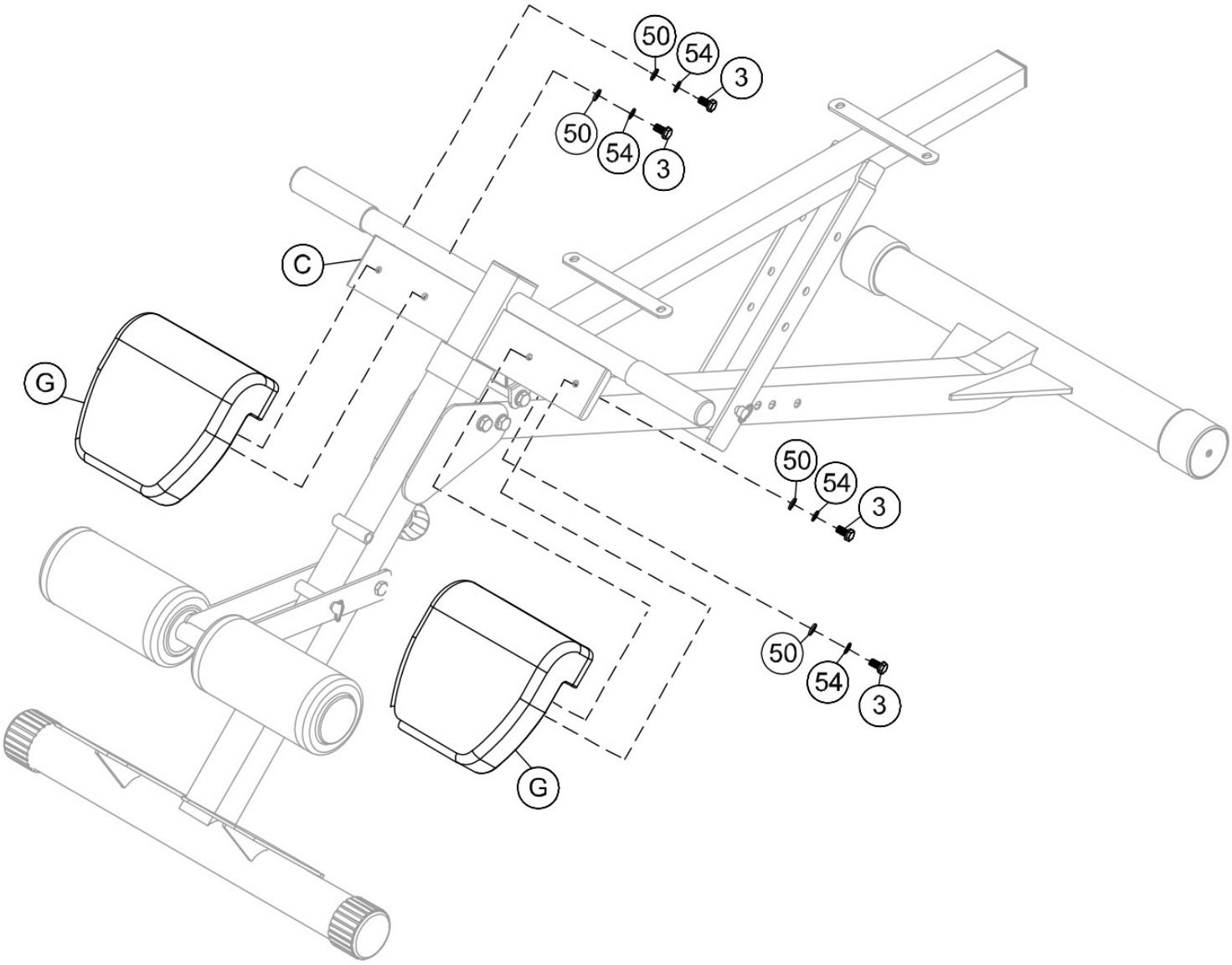

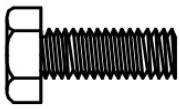

NO.3 Hex Bolt
M8*1.25*25L
4PCS

NO.54 Spring Washer
D15.4*D8.2*2T
4PCS

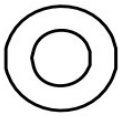

NO. 50 Flat Washer
D18*D8.5*1.2T
4PCS

STEP 6

6A. Attach both Backrest Pad (F) to Backrest Support Tube (A) using:

4 - (3) Hex Bolt M8x1.25x25L
4 - (50) Flat Washer D18xD8.5x1.2T
4 - (54) Spring Washer D15.4xD8.2x2T

Note: loosely install all the hardware by hand prior to tightening with tools. This will make aligning the holes easier

Thoroughly tighten the hardware once complete

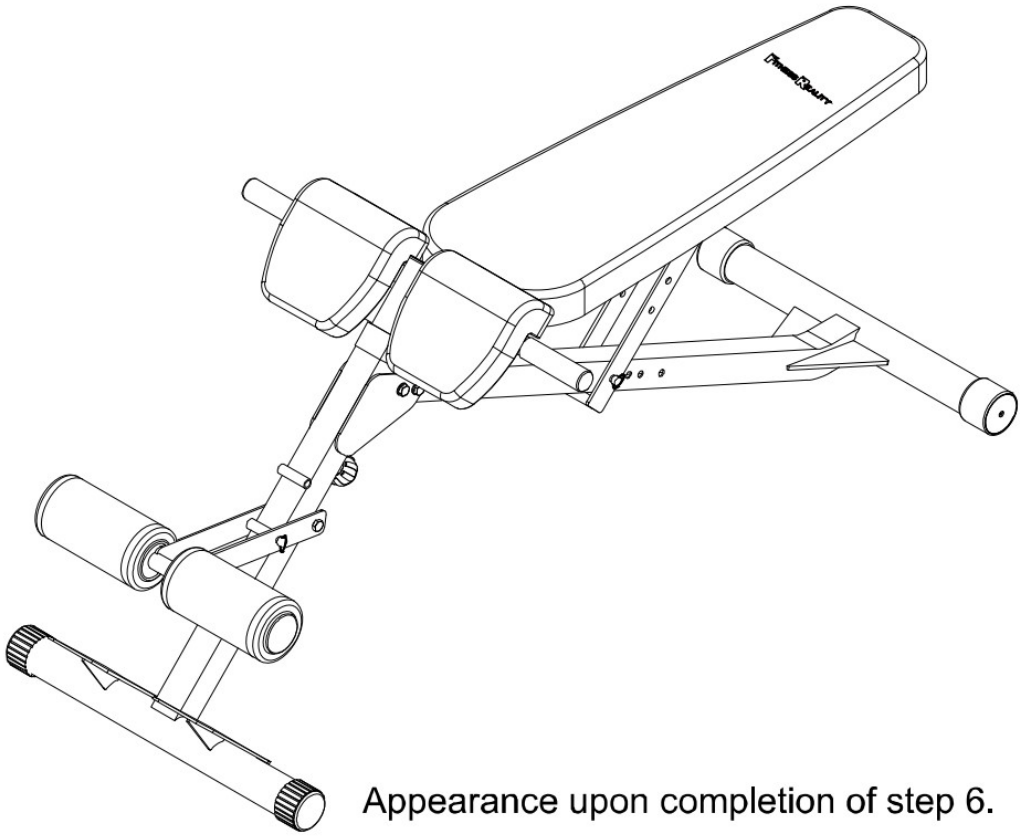

Appearance upon completion of step 6.

STEP 6

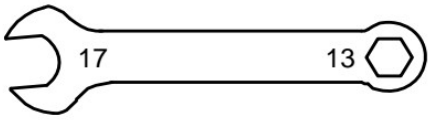

Wrench 1PC

F
A
50
54
3
50
54
3
50
54
3
50
54
3

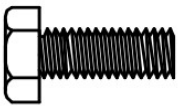

NO.3 Hex Bolt
M8*1.25*25L
4PCS

NO.54 Spring Washer
D15.4*D8.2*2T
4PCS

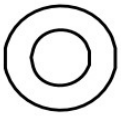

NO. 50 Flat Washer
D18*D8.5*1.2T
4PCS

ADJUSTMENTS

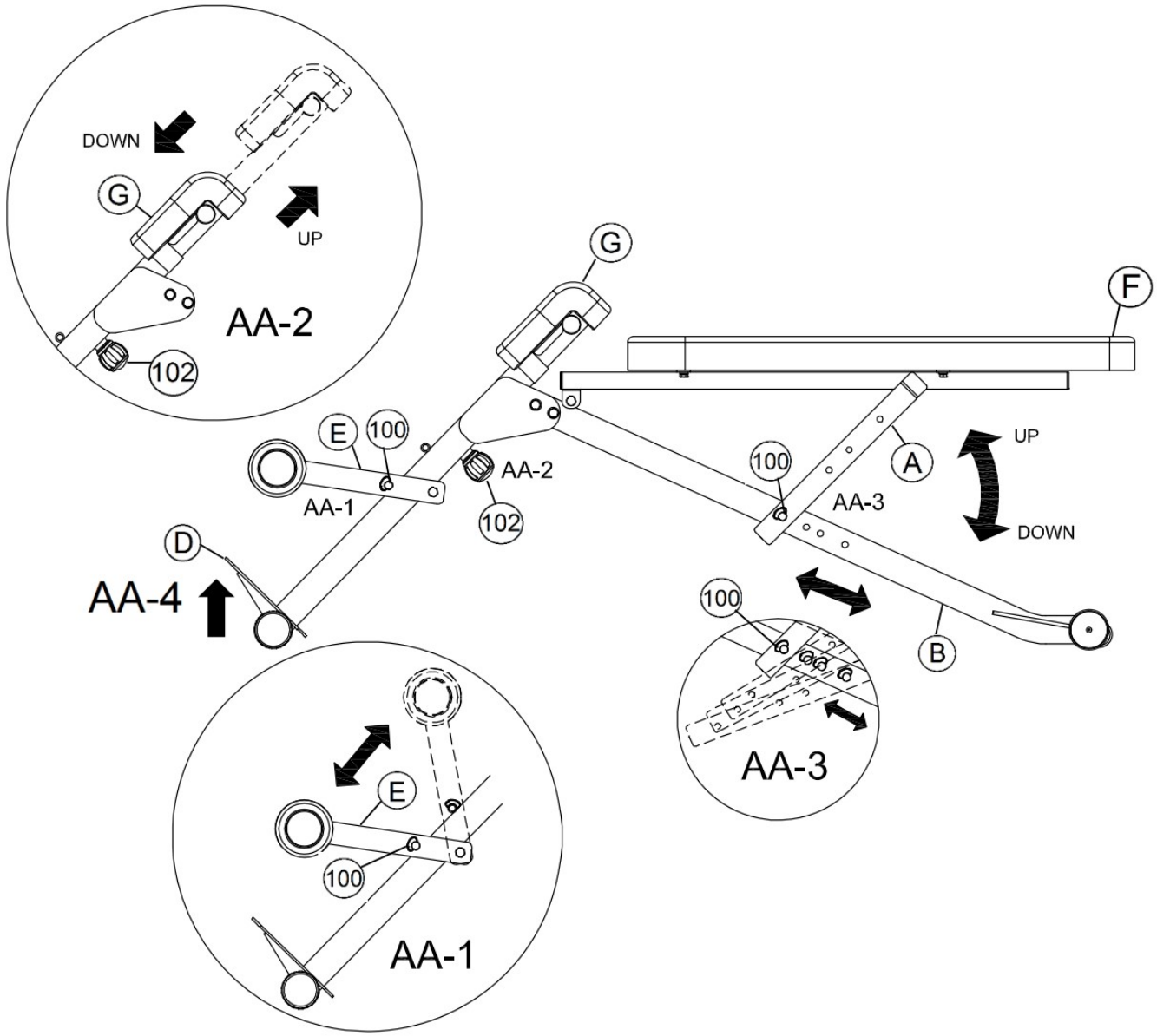

1. **Swing Tube Adjustment (Image AA-1)**
   Raise or lower the Swing Tube (E) into the desired position, align the adjustment holes, and secured it in place with the Pin (100) before using the AB Hyper Bench.
2. **Support Pad adjustment (Image AA-2)**
   Raise or lower the Support Pads (G) to the desired position, after you feel the Ball Knob (102) pin pop into one of the adjustment holes, tighten the Ball Knob (102) to secure the Support Pads (G) into place.
3. **Backrest Adjustment (Image AA-3)**
   Raise or lower the Backrest (F) to the desired position. Align the adjustment holes of the Backrest Support Tube (A) with the holes of the Rear Support Tube (B), and <u>completely secure the two parts in place with the Pin (100) before using the AB Hyper Bench.</u>
4. **Transporting the Bench (Image AA-4)**
   Grab and hold Front Support Tube (D), then carefully lift the Front Support Tube (D) until the wheels on the Rear Support Tube (B) make contact with the ground.

WARRANTY

MANUFACTURER'S LIMITED WARRANTY

Paradigm Health & Wellness guarantees to the original purchaser that this product is free from defects in material and workmanship when used for the purpose intended, under the conditions that it has been installed and operated in accordance with Paradigm's Owner's Manual. Paradigm's obligation under this warranty applies to the following:

COMPONENT	LENGTH OF WARRANTY
Structural Frame	**10 Years For Home Use Only**
Parts	**3 Years For Home Use Only**
Wearable Parts	**2 Years For Home Use Only**

Exclusions from Warranty Coverage:

Paradigm does not warrant against and is not responsible for, and no implied warranty shall be deemed to cover, any product failure, product malfunction, or damages attributable to:

1. Improper installation and/or failure to abide by Paradigm's installation guidelines;
2. Use of this product beyond normal home use, or in an application for which it was not designed.
3. All exchanged parts and Products replaced under this limited warranty will become the property of Paradigm Health and Wellness.
4. Damage caused by vandalism, accidents, inadequate maintenance, or by animals.
5. Any act of Nature (such as fire, flooding, snow, ice, hurricane, earthquake, lightning or other natural disaster), environmental condition (such as air pollution, mold, mildew, etc.), or staining from foreign substances (such as dirt, grease, oil, etc.).
6. Normal weathering due to exposure to sunlight, weather and atmosphere which can cause colored surfaces to, among other things, flake, rust, accumulate dirt or stains.
7. Improper operation, alteration, handling, storage, abuse or neglect of the product.

Paradigm, using its sole discretion, will either repair or replace free of charge any part(s) proven to be defective under normal home use. Any repair or replacement shall provide no new warranty coverage, but shall retain only the remaining portion of the original product's warranty. This warranty is offered only to the original purchaser and is not transferable. Proof of original purchase is required.

Ordering Replacement Parts

Replacement parts can be ordered by emailing our customer service department:

Service@paradigmhw.com

Open Daily 8:00 AM - 5:00 PM (PST).

When ordering replacement parts please have the following information ready:

1. Owner's Manual

2. Model Number

3. Description of Parts

4. Part Number

5. Date of Purchase

PART REQUEST FORM

Paradigm Health & Wellness, Inc.

EMAIL THIS FORM WITH YOUR RECEIPT OF PURCHASE TO

Service@paradigmhw.com

NAME:_____

ADDRESS:_____

CITY:_____ **STATE:**_____ **ZIP:**_____

TELEPHONE: **(Day)**_____

(Night)_____

SERIAL#:_____

MODEL#:_____

PURCHASE DATE:_____

PLACE OF PURCHASE:_____

PART #	DESCRIPTION	QTY

"YOUR ORDER WILL BE PROCESSED WITHIN 3 BUSINESS DAYS"

****This form can also be faxed to #: 626-810-2166***