USER'S MANUAL

SiriusXM READY

RetroSound®

MODERN SOUND FOR YOUR CLASSIC

Version 1

www.retromanufacturing.com

TABLE OF CONTENTS

WELCOME 3

WHAT'S IN THE BOX 4

PRECAUTIONS 5

INSTALLATION INSTRUCTIONS 8

WIRING DIAGRAM 11

OPERATING YOUR RADIO

- BASIC OPERATION 15
- TONE CONTROLS 18
- SYSTEM SETTINGS 20
- USB DEVICE INSTRUCTIONS 25
- BLUETOOTH® INSTRUCTIONS 28
- SIRIUSXM INSTRUCTIONS 30

SIRIUSXM TROUBLESHOOTING 34

TROUBLESHOOTING 35

FREQUENTLY ASKED QUESTIONS 36

SPECIFICATIONS 39

LIMITED WARRANTY 40

REPLACEMENT PARTS 41

INSTALLATION NOTES 42

Made for iPod®

(Correct function of earlier versions cannot be guaranteed.)

- iPod Touch (5th generation): Ver. 9.3.5
- iPod Touch (4th generation): Ver. 6.1.2
- iPod Touch (3rd generation): Ver. 5.1
- iPod Touch (2nd generation): Ver. 4.2.1
- iPod Nano (6th generation): Ver. 1.1
- iPod Nano (5th generation): Ver. 1.0.2
- iPod Nano (4th generation): Ver. 1.0.4
- iPod Nano (3rd generation): Ver. 1.1.3
- iPod Classic (160 GB) (Late 2009): Ver. 2.0.4
- iPod Classic (120 GB): Ver. 2.0.1
- iPod Classic (80 GB, 160 GB): Ver. 1.1.2

Made for iPhone®

(Correct function of earlier versions cannot be guaranteed.)

- iPhone SE: Ver. 10.1.1
- iPhone 6s Plus: Ver. 10.1.1
- iPhone 6s: Ver. 10.1.1
- iPhone 6 Plus: Ver 10.1.1
- iPhone 6: Ver. 10.1.1
- iPhone 5s: Ver. 10.1.1
- iPhone 5: Ver. 10.1.1
- iPhone 4s: Ver. 9.3.5
- iPhone 4: Ver. 7.1.2
- iPhone 3Gs: Ver. 6.1.6
- iPhone 3G: Ver. 4.2.1

For clarity in identifying your model of iPod, please see Apple's document "Identifying iPod® models" at http://support.apple.com/kb/HT1353.

"Made for iPod®" and "Made for iPhone®" mean that an electronics accessory has been designed to connect specifically to iPod® or iPhone® respectively, and has been certified by the developer to meet Apple performance standards. Apple is not responsible the operation of this device or its compliance with safety and regulatory standards. Please note that the use of this accessory with iPod® or iPhone® may affect wireless performance. Apple is not responsible for the operation of the device or its compliance with safety and regulatory standards.

iPod® and iPhone® are trademarks of Apple Inc., registered in the U.S. and other countries.

Sirius, XM, SiriusXM and all related marks and logos are trademarks of Sirius XM Radio Inc. All rights reserved.

Windows Media® and the windows logo are trademarks, or registered trademarks of Microsoft Corporation in the United States and/or other countries.

The Bluetooth® word mark and logos are owned by the Bluetooth® SIG, Inc., and any use of such marks by Retro Manufacturing, LLC are under license. Other trademarks and trade names are those of their respective owners.

Copyright © 2018 Retro Manufacturing, LLC

WELCOME

Thank you for purchasing a RetroSound® SiriusXM-Ready™ radio. Motor 4 has the advanced features you expect from a modern car stereo. The RetroSound® radio consists of two main parts: the radio face and the Motor 4 body.

General Features

- The only SiriusXM-ready™ classic car radio (SiriusXM Connect vehicle tuner and subscription required)
- Made for iPod®/iPhone®
- Built-in Bluetooth® for hands-free calling and audio streaming (microphone included)
- Wireless Audio Browsing from your iPhone® or Android device
- Plays MP3, WMA and FLAC files via USB inputs
- Selectable 32,000 color LCD illumination with user presets
- AM/FM tuner with 30 presets and RDS
- Selectable international tuner frequencies
- Built-in MOSFET amplifier (25 watts RMS/45 watts peak x 4 channels)
- 3 EQ presets plus user-controlled bass, mid-range, treble, fader, and balance adjustment
- Patented InfiniMount system for maximum installation flexibility
- Available with period-correct knobs and bezel for your vehicle
- Inputs: 2 rear-mounted standard USB ports and auxiliary inputs
- Outputs: 6-channel pre-amp outputs (front, rear, subwoofer)
- Separate power antenna and amplifier turn-on lead(s)
- 2 year warranty

The information enclosed in this user's manual is to be used as a guide to assist you with installation and operation of your radio. This guide does not cover every installation possibility, vehicle, or every aspect of the installation process.

Retro Manufacturing, LLC, RetroSound®, or its subsidiaries, assume no responsibility for any installation. This manual may be updated from time to time.

Visit our website for the latest updates: www.retromanufacturing.com.

The items shown below are packaged with your Motor 4 box.

Main Wiring Harness (plugs into back of radio)

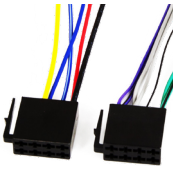

Power and Speaker Wiring Harnesses (both plug into Main Wiring Harness)

Motor 4 Radio Body

Bluetooth® Microphone

Metal Mounting Back Strap and Hardware

Plastic Washer Kit

InfiniMount Brackets

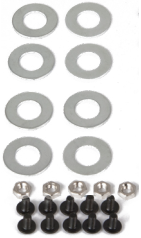

Bracket Mounting Hardware

The items shown below are packaged with your radio face box.

Radio Face

Radio Face Mounting Screws

Shafts

Shaft Mounting Hardware

Copyright © 2018 Retro Manufacturing, LLC

PLEASE OBSERVE THESE PRECAUTIONS WHEN INSTALLING AND USING THIS UNIT:

This user's manual does not cover all possible installation scenarios. If you feel you can't install this unit yourself, take it to a local car audio professional. If you have questions about installing your radio, contact us at tech@retromanufacturing.com or by calling 888.325.1555.

- Do not disassemble or modify the unit or attempt to repair the unit yourself. If the unit needs to be repaired, consult your dealer or Retro Manufacturing, LLC.
- Do not use the unit when it is out of order. If the unit is out of order or is in an abnormal state (has foreign objects in it, is exposed to water, smokes or smells), turn it off immediately and consult your dealer or Retro Manufacturing, LLC.
- Refer fuse replacement to qualified service personnel. When the fuse fails, eliminate the cause and have it replaced by a qualified service technician with the fuse prescribed for this unit. Incorrect replacement of the fuse may lead to smoke, fire and damage to the unit.
- If the unit does not turn on, check the connections first. Then check the fuse in your vehicle's fuse panel and the fuse at the unit's wiring harness. Do not expose the unit to direct sunlight or excessive heat. Excessive heat will raise the interior temperature of the unit, which may damage it.
- Do not use the unit where it is exposed to moisture or dust. Exposure of the unit to moisture or dust may lead to smoke, fire or other damage to the unit and will void your warranty. Make sure the unit does not get wet in car washes or on rainy days. Exposure to moisture will damage the unit and void your warranty.

- Refer wiring and installation to qualified service personnel. Installation of this unit requires special skills and experience. Retro Manufacturing, LLC is not liable for any problems resulting from improper installation of the unit. Please be sure to follow the instructions carefully while attempting installation.
- Follow the instructions to wire the unit. Failure to follow the instructions could cause damage to the unit, fire, injury or death.
- Be careful not to damage the leads. Prevent them from being caught in the vehicle chassis or from being damaged by screws or moving parts such as seat rails. Do not scratch, pull, bend or twist the leads. Do not install them near heat sources or place heavy objects on them. If the wiring must be routed around sharp metal edges, protect them by wrapping them with vinyl tape or similar protections.

  NOTE: Cutting the main wiring harness, antenna lead, USB or auxiliary cables will void the warranty of your radio.

- We recommend only using the designated parts and tools when installing this unit. If mounting the radio face or body remotely, use extreme caution not to damage internal parts when choosing brackets and screws.
- Do not interfere with safety-related vehicle components. Do not wire or affix this unit to the fuel tank, brakes, suspension, steering wheel, pedals, etc. Check for electric wiring, piping and other items before installing the unit.
- Never install the unit in a location where it interferes with your field of vision.
- Use the supplied metal backstrap to secure the rear of the unit. Failure to secure the back of the unit will damage the shafts and void your warranty.

Copyright © 2018 Retro Manufacturing, LLC

PRECAUTIONS

- Never splice into the power lead to supply other equipment with power.
- After installation and wiring, always check the normal operation of other electrical equipment.
- Make sure that no wires interfere with driving or getting in and out of the vehicle.
- Insulate all exposed wires to prevent short-circuiting or electric shock.
- Do not operate the unit for prolonged periods with the engine off. Prolonged operation with the engine turned off will drain the battery.
- Keep the volume of your radio at a level that allows you to hear outside noises such as emergency sirens and train crossing warnings. Prolonged exposure to high volume levels may also result in hearing loss.
- This unit requires 12 volts to both the red and yellow power leads. The unit will not work without 12 volts to both of these leads.
- Always disconnect the negative (-) battery cable before beginning installation. Verify the battery ground by checking that one wire is connected to the vehicle's starter mounting bolt or engine block and the other to the vehicle's chassis using at least 8 gauge wire. Make sure the alternator or generator connections are secure and free from corrosion, rust or dirt.
- This unit is designed for operation with a negative ground 12 volt DC battery system. Do not operate this unit with other battery systems, especially an 18 or 24 volt DC or a positive ground system. If you have a 6 volt system, you need to either convert to 12 volt DC or purchase a separate inverter that would increase the voltage to 12 volts.

NOTE: The inverter needs to be rated at 10 amps or higher in order for the radio to operate properly.

STEP 1: Install the Radio Face

Plug the ribbon cable included with the Motor 4 radio body into the radio face. After plugging in the radio face, attach it to the radio body (if it is not already attached) and tighten with the four radio face mounting screws provided in the radio face box (the screws are very small and are included in the hardware kit included with your Motor 4 box).

The RetroSound® logo on the Motor 4 radio body should be facing upwards. Take care to not install the face to the body upside down.

NOTE: Optionally, the radio face can be mounted remotely up to nine feet away from the Motor 4 radio body using an optional Face to Body Extension Cable (sold separately). In some installation applications, a bracket (not included) can be used to mount the radio face to the radio body at an angle.

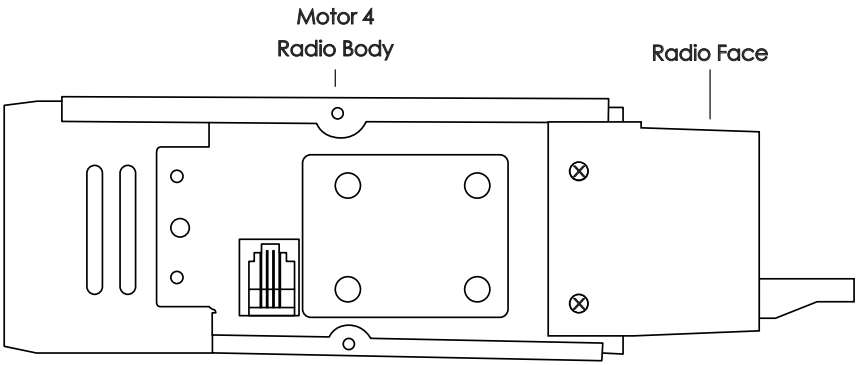

Figure 1 - Attach the Radio Face

Copyright © 2018 Retro Manufacturing, LLC

STEP 2: Install InfiniMount Brackets

Attach each InfiniMount bracket to the correct side of the radio body using the supplied screws (the brackets are marked with a "L" for left and a "R" for right). Before tightening the screws, you need to adjust the brackets up, down, forward or backward (see Figure 2). You may also rotate, cut, or bend the brackets to achieve the perfect fit. Complete the assembly with at least two screws tightened on each side.*

*In some installations the brackets must be moved far enough forward or backwards or rotated so that only two screws will align with the threaded screw holes on the radio. Two screws are sufficient to hold the brackets in place.

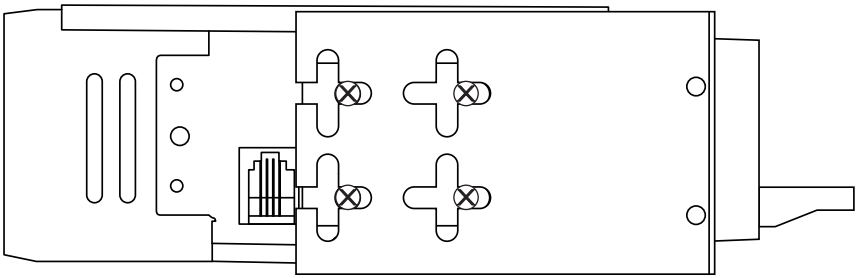

Figure 2 - Attach InfiniMount Brackets

NOTE: You may need to cut, trim or bend the brackets to achieve a perfect fit. You can even drill new mounting holes into the bracket if you need to. The InfiniMount system is designed to be modified. Modifying your brackets will NOT void your warranty.

STEP 3: Mount Shafts to Brackets

To match the the location of your shafts to the proper width of your vehicle's dash, measure the distance between your existing shaft holes from center to center.

Mount a shaft to each bracket using the supplied shaft nuts and washers. Finger tighten the shaft nuts to prepare for the final installation (see Figure 3). Once you ensure the proper width, snug down the screws and nuts (DO NOT OVERTIGHTEN).

DO NOT OVERTIGHTEN. OVERTIGHTENING THE SHAFT NUTS WILL DAMAGE THE SHAFTS. DAMAGE FROM OVERTIGHTENING WILL VOID YOUR WARRANTY.

Finally, plug the shafts into each side of the main unit (see Figure 4).

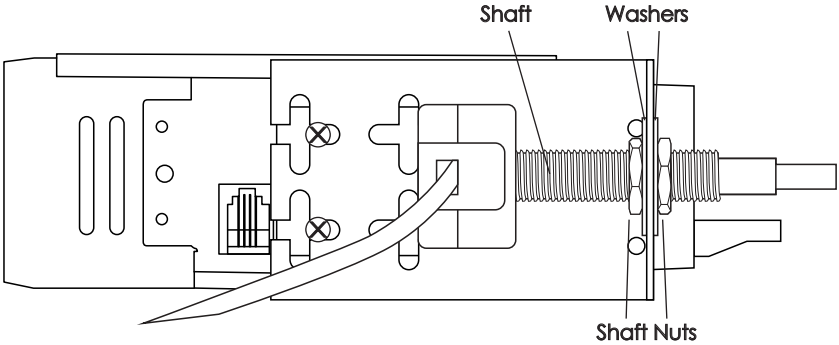

Figure 3 - Mount Shafts to Brackets

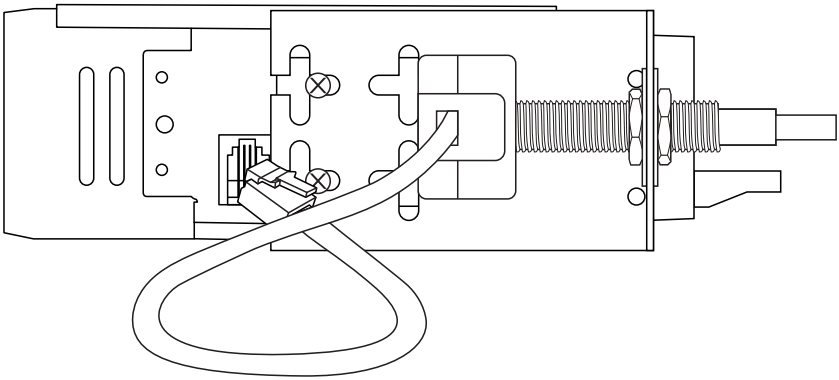

Figure 4 - Plug Shafts into the Body

Copyright © 2018 Retro Manufacturing, LLC

STEP 4: Complete Wiring Connections

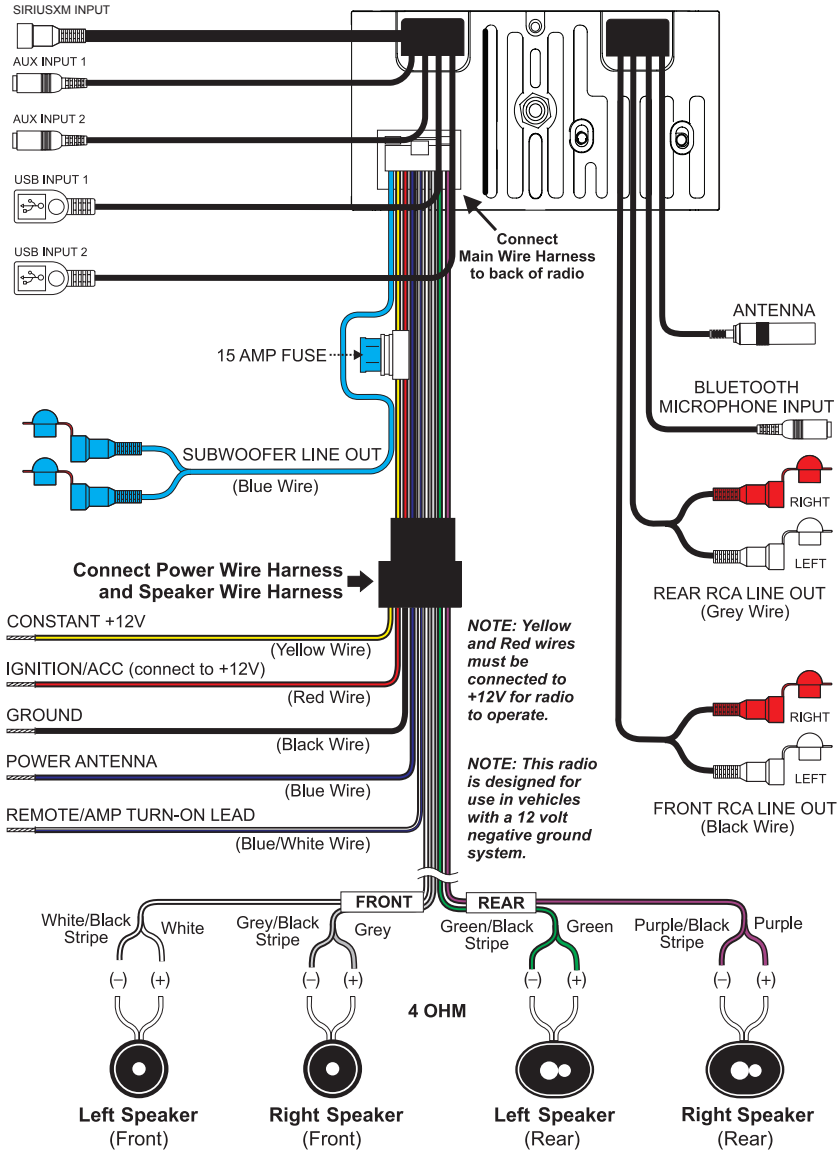

Figure 5 - Wiring Diagram

NOTE: Cutting the wiring harness, antenna lead or auxiliary cable will void your warranty.

NOTE: This unit requires +12 volts to both the red and yellow wires to operate properly.

Locate the three wiring harnesses: main wiring harness, power wiring harness and speaker wiring harness (see "What's in the Box" on page 4). First connect the main wiring harness to the back of the radio body. Then connect both the power and speaker wiring harnesses to the black female plug of the main wiring harness.

Next, connect the bare wire ends of your power and speaker wires to the appropriate power and speaker locations in your vehicle (see Figure 5). Have your radio installed by a professional if this part of the install is too difficult, or contact us if you have questions.

Bluetooth® Microphone

Your Bluetooth® microphone enables you to place hands-free phone calls through your radio. The Bluetooth® microphone input is located at the rear of the radio body. To use your Bluetooth® microphone, you will need plug it into the plug at the rear of the radio body and route it to an accessible location such as the A-pillar or the steering column.

Rear Auxiliary (AUX) Inputs

Two auxiliary inputs are located at the rear of the radio body. These auxiliary inputs allow you to listen to any external source with a standard headphone output. An example of an external source would be a MP3 player, iPod® or iPhone®, portable CD player or portable satellite radio receiver.

NOTE: If the auxiliary cables provided are not long enough, you may use our USB/AUX Extension Cable (sold separately) to extend the reach of one cable. This cable also allows the installation of one USB and auxiliary port into the factory location of the cigarette lighter for a factory look and easy access. A male to male 3.5mm auxiliary cable is required to connect your device to the auxiliary port on your radio.

Copyright © 2018 Retro Manufacturing, LLC

Rear USB Inputs

Two USB connector cables are located at the rear of the radio body. During installation, you must route the cables to an accessible location.

NOTE: If the USB cables provided are not long enough, you may use our USB/AUX Extension Cable (sold separately) to extend the reach of one cable. This cable also allows the installation of one USB and auxiliary port into the factory location of the cigarette lighter for a factory look and easy access.

SiriusXM Input

The SiriusXM input is located at the rear of the radio body. Instructions for wiring and installing your SiriusXM Connect vehicle tuner are included with your SiriusXM Connect vehicle tuner box.

STEP 5: Finish the Installation

IF USING A BEZEL, place the bezel on the face of the radio, then install the assembled radio from behind the dash until the bezel and radio face are flush with the front of the dash and the radio shafts protrude through the shaft openings in the dash. Using the supplied washers and shaft nuts (see "What's In the Box" on page 4), secure the radio to the dash.

IF USING A FACEPLATE, slide the radio into the hole from behind the dash, then align the faceplate over the radio shafts from the front. Using the supplied washers and shaft nuts (see "What's In the Box" on page 4), secure the faceplate to the dash and the radio.

DAMAGE RESULTING FROM OVERTIGHTENING THE SHAFT NUTS WILL VOID YOUR WARRANTY.

Finally, you'll need to secure the rear of the radio using the supplied backstrap and hardware (see "What's in the Box" on page 4). The backstrap mounts using the threads in the rear of the radio body and can be bent and adjusted to align with the mounting point of the original factory radio behind the dash. Now you can install your knobs.

THE SHAFTS ARE NOT STRONG ENOUGH TO SUPPORT THE WEIGHT OF THE RADIO. FAILURE TO SECURE THE RADIO WITH THE BACKSTRAP CAN DAMAGE YOUR SHAFTS AND WILL VOID YOUR WARRANTY.

Figure 6 - Installing the Backstrap

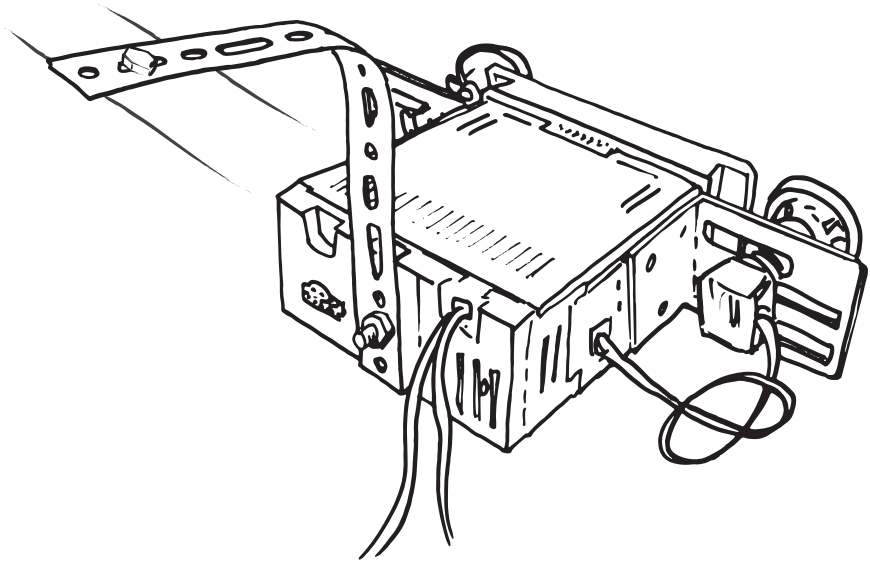

View from behind dash

Finally, slide the rear knobs over the shafts, rotating them into the correct position, and push them into place. Mount the front knobs by gently pressing them onto the shaft.

DO NOT PRESS TOO HARD. PRESSING TOO HARD CAN DAMAGE YOUR SHAFTS AND WILL VOID YOUR WARRANTY.

Copyright © 2018 Retro Manufacturing, LLC

BASIC OPERATION

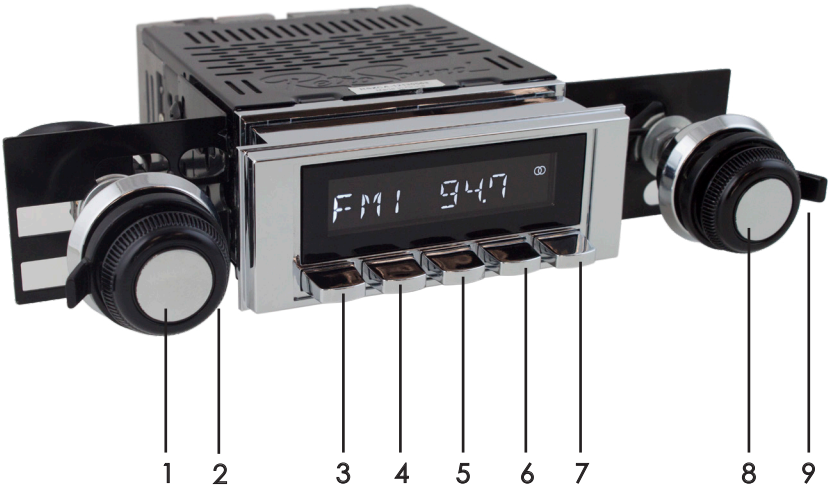

Figure 7 - Radio Controls

1. Left-Front Knob
2. Left-Rear Knob
3. Push-Button
4. Push-Button
5. Push-Button
6. Push-Button
7. Push-Button
8. Right-front Knob
9. Right-Rear Knob

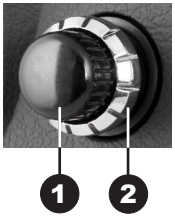

Figure 8 - Left Shaft with Knobs

GENERAL OPERATION

Power On/Off

Press the left-front knob (#1) to turn the unit on.
RETROSOUND will appear on the screen.

Press and hold the left-front knob (#1) to turn the unit off.
GOODBYE will appear on the screen to confirm that it has turned off.

Volume

Rotate the left-front knob (#1) to adjust the volume between 0-46.

Source Mode

Rotate the left-rear knob (#2) clockwise to select from available listening sources: RADIO, AUX 1, AUX 2, USB 1, USB 2, BT AUDIO, SIRIUSXM.

NOTE: The USB source modes will not appear unless a USB device is plugged in.

The auxiliary and USB inputs are located at the back of the radio body. The auxiliary inputs may be used to play music from any portable device with a standard headphone output, such as a MP3 player, iPod® or iPhone®, portable CD player or portable satellite radio receiver. The USB inputs allow you to control your iPod®/ iPhone® or play music from a flash drive. To use these inputs, the cables must be routed to an accessible area during installation.

Radio Tuning

Rotate the right-front knob (#8) to tune to the next or previous AM/FM frequency.

NOTE: When the radio is tuned to a strong stereo FM station, the stereo indicator will appear on the upper right corner of the LCD screen (two oval circles).

Copyright © 2018 Retro Manufacturing, LLC

Radio Bands

Turn the right-rear knob (#9) counter-clockwise to toggle through five radio bands (two AM and three FM).

Storing Radio Presets

There are six radio presets for each radio band. For presets one through five, tune to the desired radio station and then press and hold the appropriate push-button (#3-7) to store into memory. To store preset number six, tune to the station you want to store, then rotate and hold right-rear knob (#9) clockwise to store.

Selecting Radio Presets

To recall radio presets, press the appropriate push-button (#3-7) in the selected radio band. To recall preset six, rotate the right-rear knob (#9) clockwise and release it.

Mute/Pause

Press the right-front knob (#8) to mute/unmute or pause/play depending on the source mode.

TONE CONTROLS

The Tone Controls sub-menu allows advanced tonal adjustments, balance and fader controls and preset equalizer options. To access this sub-menu, press the left-front knob (#1). Repeatedly press the left-front knob to cycle through the available options. To adjust within the sub-menu, rotate the left-front knob (#1) clockwise or counter-clockwise.

Digital Signal Processor (DSP)

This sub-menu toggles the Digital Signal Processor (DSP) on and off. Factory default is DSP OFF. Activating DSP allows you to choose one of three preset equalization settings:

- CLASSIC This setting offers subtle sonic adjustments that lend themselves to classical music.
- POP This setting accentuates bass and treble frequencies and is suitable for popular music.
- ROCK This setting accentuates treble frequencies and is suitable for rock music.

Bass

This sub-menu (BASS) adjusts bass tones between +7 to -7.

Middle

This sub-menu (MIDDLE) adjusts mid tones between +7 to -7.

Treble

This sub-menu (TREBLE) adjusts treble tones between +7 to -7.

Copyright © 2018 Retro Manufacturing, LLC

Balance

This sub-menu (BAL) adjusts the stereo balance to the left or the right. This may be helpful in compensating for the position of the driver in relation to the vehicle's speakers. Adjustment range is from 0-12 between the left and right speakers.

Fader

This sub-menu (FADER) adjusts the sound between the front and rear speakers. Adjustment range is from 0-12 between front and rear speakers.

XBAS

This sub-menu (XBAS) boosts bass and treble for listening at low volumes. This should only be used at low volume levels and should be set to XBAS OFF at higher volumes.

Subwoofer ON/OFF

This sub-menu (SUB) toggles the subwoofer RCA output on or off.

Subwoofer Volume

This sub-menu (SUB VOL) adjusts the volume of the subwoofer between 0-12 and will only appear when SUB ON is selected in the Subwoofer menu.

Subwoofer Crossover Frequency

This sub-menu (SUB 120H) adjusts the frequency crossover point of the subwoofer between 80Hz, 120Hz or 160Hz.

Bass Crossover Frequency

This sub-menu (BAS 80H) adjusts the frequency crossover of the bass-tones between 60Hz, 80Hz, 100Hz or 200Hz.

Middle Crossover Frequency

This sub-menu (MID 1.0K) adjusts the frequency crossover of the mid-tones between 0.5KHz, 1.0KHz, 1.5KHz or 2.5KHz.

Treble Crossover Frequency

This sub-menu (TRE 10.0K) adjusts the frequency crossover of the treble-tones between 10.0KHz, 12.5KHz, 15.0KHz or 17.5KHz.

SYSTEM SETTINGS

The System Settings sub-menu system enables access to numerous additional features of your radio. Press and hold the right-front knob (#8) for three seconds to access the System Settings sub-menu. Then rotate the right-front knob (#8) to scroll through the available sub-menu options. Once in a specific sub-menu, press the right-front knob (#8) to change the options.

Auto Seek/Manual

This sub-menu toggles between AUTO SEEK or MANUAL tuning when listening to the radio. In Auto Seek mode, the radio will tune to the next available station when tuning.

A Store

This sub-menu is only available when the source mode is set to RADIO and will automatically fill all radio presets on all radio bands with the strongest stations. To activate this feature, once in the system settings, rotate the right-front knob (#8) until A STORE appears on the screen, then press the right-front knob (#8) to activate. This process can take up to one minute.

Copyright © 2018 Retro Manufacturing, LLC

Local/Distant

This sub-menu changes the sensitivity of the FM tuner. When listening to the FM tuner, selecting between LOCAL and DISTANT can aid in listening to weak FM stations or compensate for stations that have too strong a signal.

Clock

This sub-menu sets the clock. To adjust hours, rotate the right-front knob (#8). Adjusting past 12 will toggle the AM/PM indicators. Once the hour is set, press the right-front knob (#8) to move to minutes. Rotate to adjust minutes, then press the right-front knob (#8) to access the 12/24 menu.

Clock 12/24

This sub-menu adjusts the clock from a twelve hour clock to a twenty-four hour clock. The factory default setting is for a twelve hour clock (CLK 12).

Display Frequency/Clock

This sub-menu adjusts the priority screen view between radio frequency (DISP FREQ) and clock (CLK).

Clock ON/OFF

This sub-menu toggles off the clock when the radio is turned off. Default is CLK ON.

Beep On/Off

This sub-menu toggles the audible beep confirmation that sounds during operation of the radio. Select BEEP ON to hear the audible beep, and BEEP OFF to disable the audible beep.

Display Color (SCAN)

This sub-menu changes the display color. The default setting is SCAN, which will scan through all of the available colors. To customize your display color, look for the word SCAN in the sub-menu (if a custom color has already been chosen, look for that color name in the sub-menu), then press the right-front knob (#8) to select one of the preset colors: WHITE, GREEN 1, GREEN 2, GREEN 3, ORANGE, RED, PINK, PURPLE 1, PURPLE 2, BLUE 1, BLUE 2, USER, SCAN.

To create a custom color, select USER in the preset color menu, then rotate the right-front knob (#8) once. The display will say RGB. Now press the right-front knob (#8) once. This will allow you to edit the RGB values for 32,000 color variations. Rotate the right-front knob (#8) to adjust the reds, then press the same knob (#8) to move to the greens. Repeat this process to adjust the greens and the blues.

NOTE: If you lower all RGB settings down to "00" the display will go black, and you will need to reset the radio by disconnecting all power from the unit for 2 minutes.

Dimmer

This sub-menu adjusts the radio's display brightness between high (DIMM HIGH), mid (DIMM MID) and low (DIMM LOW).

Radio Data System (RDS) ON/OFF

This sub-menu toggles the RDS function on or off. The default is RDS ON. RDS tuners can automatically tune in stations according to the style of music (or talk) they broadcast. Some RDS tuners can even break in with traffic alerts or emergency broadcasts.

RDS enables your receiver to display text messages (usually call letters and format info) that many FM stations include on a sub-carrier signal within their normal broadcast signal. The RDS function is always active, and if the FM station you are listening to is broadcasting RDS information, the radio station call letters, song info, artist info and other messages will appear. Not all FM stations use RDS nor will all RDS functions work in every location.

Copyright © 2018 Retro Manufacturing, LLC

Program Type (PTY)

This sub-menu enables you to select up to 31 pre-defined program types finding similar programming by genre.

To change your program type, cycle through the sub-menu system by rotating the right-front knob (#8) until you see PTY. Now press the right-front knob (#8) to activate, then rotate the right-front knob (#8) to select from the program type list. Press the right-front knob (#8) to enable your selection.

Now you will see PTY SEEK on the screen which indicates that the radio is searching the FM band for stations with your selected program type. If none are found, it will revert back to the last station selected.

Alternative Frequency (AF) ON/OFF

This sub-menu enables the radio to automatically search for another frequency that provides the same station when the signal gets weak.

Traffic Announcements (TA) ON/OFF

This sub-menu toggles the traffic announcements function on or off. The traffic announcements function is part of RDS and allows FM stations to broadcast traffic announcements that scroll across the screen or audible traffic alerts to your radio. Press the right-front knob (#8) to choose between TA ON or TA OFF and allow the display to time out to enable your choice.

Clock Time (CT) ON/OFF

This sub-menu toggles the clock time feature on or off. If the radio station supports clock time, your radio will synchronize its clock with the radio station's clock.

Bluetooth® ON/OFF (BT)

This sub-menu toggles Bluetooth® on or off. Bluetooth® must be enabled in order to connect a Bluetooth® device.

Bluetooth® Connect/Disconnect

This sub-menu enables the radio to be discoverable on your Bluetooth® device. Choose BT CONNEC to allow your device to connect, and BT DISCON to disable Bluetooth® connections.

To connect your device, choose BT CONNEC, then search for "RETROSOUND" in your phone's Bluetooth® device list.
Enter password "0000" if prompted.

Area USA/EUR/AUS/JAP/RUS

This sub-menu enables you to adjust to broadcasts in your country. Factory default setting is United States (USA). Turn the right-front knob (#8) to toggle between Europe (EUR), Australia (AUS), Japan (JAP) and Russia (RUS). You will see your selected tuner mode: AREA USA, AREA EUR, AREA AUS, AREA JAP, AREA RUS.

Volume Last/Adjust

This sub-menu adjusts the turn-on volume level. The factory default setting is VOL LAST, which sets the turn-on volume level to the last volume level used. VOL ADJUST allows you to preset the turn-on volume level from 0-46 regardless of the last volume level used.

Radio Information

This sub-menu cycles through various technical information about your unit.

Reset

This sub-menu resets your SiriusXM settings back to default values.

Copyright © 2018 Retro Manufacturing, LLC

USB DEVICE INSTRUCTIONS

Connecting a USB Device

The USB 1 and USB 2 inputs are located at the rear of the radio body. The USB cables must be routed to a convenient and accessible location for connecting USB devices.

Once you've turned on your radio and connected your flash drive, iPod®/iPhone® or supported USB device to one of the USB inputs, the radio will display USB 1 or USB 2 for three seconds. Then the radio will find your songs and automatically begin playing them.

The USB icon appears on the LCD during USB playback.

About MP3/WMA/FLAC Files

MP3 (MPEG Audio Layer-3),WMA (Windows Media Audio) and FLAC (Free Lossless Audio Codec) is a format for compressed audio files. When your radio is in USB mode (USB 1 or USB 2), you can play MP3 and unprotected (no DRM) WMA files on a flash drive.

Common facts about these compressed-sound formats:

- High bit rate and high sampling frequencies are recommended for high sound quality.
- Selecting VBR (Variable Bit Rate) is not recommended because playing time is not displayed properly and there may be some audible skipping artifacts. The playback sound quality differs depending on the encoding circumstances. For details, refer to the user manual of your encoding software.
- When adding MP3 files to your flash drive, it is recommended to set the bit rate to "fixed" at 128 kbps or better.
- When adding WMA files to your flash drive, it is recommended to set the bit rate to "fixed" at 64 kbps. Do not set the copy protect attribute on the WMA file or you will not be able to play the track.
- Motor 4 will read only FAT or FAT32 formatted flash drives. This radio will NOT read NTFS formatted drives.
- Motor 4 will read files placed in the root directory first before playing files in the folder structure of the drive.
- Motor 4 will play your MP3 or WMA files in the same order that you copy them to your USB device – the files copied first will play first.

Caution! Except for private use, duplicating audio data (including MP3/WMA) or distributing, transferring or copying it, whether free or paid for without permission of the original copyright holder is strictly prohibited by law and international treaty.

Viewing MP3/WMA Song Information

When playing MP3/WMA files from the USB source, you can view the track name, album name and artist (ID-3) information automatically from these files. Once the USB drive is inserted, the following info will scroll across the screen in the following order: F-DIR (folder directory), MP3 FILE (file name of song), ALBUM (name of album) ARTIST (name of artist), SONG (name of song).

To access the clock when in USB mode, turn the left-rear knob (#2) counter-clockwise. The clock will time out after a few seconds and will revert to the ID-3 information. Turning the left-rear knob (#2) counter-clockwise again will revert to viewing the ID-3 information on-screen.

NOTE: FLAC format does not support ID-3 information and will not display the artist or song information. Not all music software handles ID-3 information the same way. Some software will produce MP3 files with ID-3 information that is not readable by Motor 4. If this occurs, you may need to use a converter or ID-3 editor to change the ID-3 information for the artist, album and song information to display properly on your radio.

Copyright © 2018 Retro Manufacturing, LLC

USB Playback Mode

The preset buttons (#3-7) on the front of the radio's control face will enable you to play/pause, listen to 10 seconds of each song (INTRO), randomly shuffle all songs (RDM) and navigate folders.

To play or pause, press button (#3).

To activate/deactivate scan, press button (#4).

To activate/deactivate shuffle, press button (#5).

To go to the previous folder, press button (#6).

To go to the next folder, press button (#7).

To switch to the next song, rotate the right-front knob (#8) clockwise.

To switch to the previous song, rotate the right-front knob (#8) counter-clockwise.

To activate/deactivate repeat, rotate the right-rear knob (#9) clockwise.

Bluetooth® Instructions

Bluetooth® Hands-Free and A2DP Streaming Operation

You can make or receive phone calls using a Bluetooth® enabled phone connected to your radio, and control basic functions via the radio interface. During a call, the radio music source will be muted and the call broadcast through your car speaker system. You can also listen to music stored on a A2DP enabled Bluetooth® device.

Pairing a Bluetooth® Device

When connecting a Bluetooth® device for the first time, you must first pair the device with the unit. For most devices, pairing only needs to be done once.

1. To pair your device first make sure the Bluetooth® function is turned on in the radio sub-menu.
2. Then, change the BT DISCON function to BT CONNEC to make your radio discoverable (ensure Bluetooth® is enabled on your device).
3. Next, search for a new Bluetooth® device from the phone (this may take up to 30 seconds) and select "RETROSOUND" from the Bluetooth® device list.
4. If prompted, enter "0000" for the PIN. If successful, "PAIRING OK" will be displayed on the LCD screen.

The paired device will then connect to your radio automatically.

On some devices, you may need to select "SET AS AUTHORIZED" or similar to ensure your radio will automatically pair on future usage.

PAIRED NOTIFICATION DISPLAY: When the Bluetooth® device is paired with your radio, the Bluetooth® icon will appear on the LCD screen. This will occur whenever you use the system while the paired device is within range.

Copyright © 2018 Retro Manufacturing, LLC

Placing a Call

1. Dial the desired number on the paired phone.
2. Once dialing is in progress, CALLING will appear on the screen.
3. Once the call is in progress, TALK will appear on the screen along with the elapsed call time (TALK 00:00).

Receiving a Call

1. If a call is incoming, any audio playback from the current source will either be muted or paused (depending on the source) and PHONE IN will be shown on the screen along with the caller ID if it is enabled by the phone/carrier.
2. To accept the call, rotate the left-rear knob (#2) counter-clockwise.

Ending a Call

1. To end the call, rotate the left-rear knob (#2) counter-clockwise.

NOTE: We recommend mounting the microphone on the sun visor, A-pillar, steering column or somewhere inside the vehicle close to the driver. The microphone is very sensitive, and you may speak at normal volume when using hands-free operation.

Streaming Music From Your Device

2. Once your device is paired with your radio, make sure the source mode is set to BT AUDIO.
3. Next, select your desired playback source on your device (iTunes®, Pandora®, etc) and play the music as you normally would.

NOTE: Some devices will allow you to browse folders and skip songs by turning the right-front knob (#4). Rotate the right-rear knob (#3) counter-clockwise to access the browsing sub-menu. Menu items: Artist, Album, Song, Folder, Etc. Turn the right-front knob (#4) to cycle through the menu, and press the right-front knob (#4) to make your selection.

SIRIUSXM SATELLITE RADIO

Only SiriusXM brings you more of what you love to listen to – all in one place. Get over 140 channels – including commercial-free music plus the best sports, news, talk, comedy and entertainment. Welcome to the world of satellite radio. A SiriusXM Connect tuner and subscription are required. For more information, visit www.siriusxm.com.

Activating your SiriusXM Subscription

After installing your SiriusXM Connect tuner and antenna, power on your radio and select the SiriusXM source mode. You should be able to hear the SiriusXM preview channel on channel 1. If you can't hear the preview channel, check your tuner's installation instructions to make sure your SiriusXM Connect tuner is properly installed.

Once you can hear the preview channel, tune to channel 0 to find the Radio ID of your tuner. The radio ID can also be found on the bottom of the SiriusXM Connect tuner and its packaging. You will need this number to activate your subscription. Write down the number and store it in a safe place for reference.

NOTE: the SiriusXM Radio ID does not include the letters I, O, S or F.

In the USA, you can activate online at www.siriusxm.com/activatenow or by calling SiriusXM Listener Care at 866.635.2349.

In Canada, you can activate online at www.siriusxm.ca/activatexm or by calling XM Customer Care at 877.438.9677.

As part of the activation process, the SiriusXM satellites will send an activation message to your tuner. When your radio detects that the tuner has received the activation message, your radio will display a message to confirm that the subscription updated. Once subscribed, you can tune to channels available in your subscription plan. The activation process usually takes 10 to 15 minutes, but may take up to an hour. Your radio will need to be powered on and receiving the SiriusXM signal to receive the activation message.

Copyright © 2018 Retro Manufacturing, LLC

OPERATING SIRIUSXM FEATURES

SiriusXM Preset Bands

You can store five SiriusXM channels in three bands for a total of 15 presets. To toggle between the SiriusXM bands, rotate the right-rear knob (#9) counter-clockwise.

Tuning

Rotate the right-front knob (#8) to change channels up or down. Rotate and hold the right-rear knob (#9) to rapid tune up or down.

Storing SirusXM Presets

There are five presets for each SiriusXM band. To set a preset, tune to the desired radio station, then press and hold the appropriate push-button (#3-7) to store into memory.

Selecting SiriusXM Presets

To recall SiriusXM presets, press the appropriate push-button (#3-7) in the selected radio band.

Replay™ Function

The Replay™ feature allows you to play, pause, skip, fast forward and rewind.

Pause/Resume

To pause SiriusXM playback and enter Replay™ mode, press the right-front knob (#8). The screen will display IR PAUSED when entering this mode.

To resume playback from the point at which it was paused, press the right-front knob (#8) again. During playback, the channel audio will continue to be stored until Replay™ mode is exited.

Playback Controls

To fast forward, press and hold button (#7). To rewind, press and hold button (#6).

To skip forward press button (#7). To skip backward, press button (#6).

NOTE: Changing channels or source modes while in Replay™ mode will exit Replay™ mode and clear Replay™ memory.

To exit Replay™ mode and return to live satellite radio, press button (#3).

Display Settings

Each SiriusXM channel will broadcast text information such as the channel name, artist, song title and content. To cycle through the display information, rotate the left-rear knob (#2) counter-clockwise. Each time the knob is rotated counter-clockwise, the display will change as shown: CHANNEL > BAND > CHANNEL NAME > ARTIST NAME > SONG TITLE > CONTENT INFO > CATEGORY NAME > CLOCK.

SIRIUSXM SUB-MENU SYSTEM

The SiriusXM sub-menu system can only be accessed while in the SiriusXM source mode by rotating the right-rear knob (#9) clockwise once. To cycle to the next category, rotate the right-front knob (#8) clockwise. To select a specific sub-menu, press the right-front knob (#8). To exit the sub-menu, rotate the right-rear knob (#9) clockwise.

The SiriusXM sub-menu system includes:

- CATEGORY (specific music/news/sports channels)
- DIRECT (direct tuning to a desired station)
- MATURE OFF (toggles Mature Channel Lock on or off)
- MATU CODE (changes the Mature Channel Lock passcode)
- SIGNAL (SiriusXM signal strength)

Copyright © 2018 Retro Manufacturing, LLC

Category

This feature enables the ability to search for channels based upon their specific category. Once you have entered this sub-menu, rotate the right-front knob (#8) clockwise to cycle through the categories. Once you find the desired category, press the right-front knob (#8) to make your selection. Now you can rotate the right-front knob (#8) to cycle through every channel within that category.

Direct (Direct Channel Tune)

This feature enables the ability to directly tune to any channel by entering the channel number. Once you have entered this sub-menu, rotate the right-front knob (#8) to cycle to the first number. Press the right-front knob (#8) to select this number, then rotate the right-front knob (#8) to cycle to the next number. Once you have found the channel you want, press the right-front knob (#8) to select.

Mature (Mature Channel Lock)

This feature enables the ability to limit access to SiriusXM channels with mature content. When enabled, the Mature Channel Lock feature requires you to enter a passcode to tune to the locked channels. The default code is 1111. Rotate the right-front knob (#8) to scroll to the first number. Press the right-front knob (#8) to select this number, then rotate the right-front knob (#8) to cycle to the next number. Repeat this process for the remaining numbers.

Mature Code (Lock/Unlock code)

The Mature Channel Lock code can be changed by entering the mature code sub-menu. The default code is 1111. Once you have entered the Mature Code sub-menu, rotate the right-front knob (#8) to scroll to the first number. Press the right-front knob (#8) to select this number. Rotate the right-front knob (#8) to cycle to the next number, then press the right-front knob (#8) to make the next selection.

Signal

This sub-menu displays the current SiriusXM signal strength.

If SiriusXM does not appear to be functioning properly and one of these advisory messages appears on the display, try some of these troubleshooting tips.

CHK TNR (Check Tuner)

This message indicates an issue with your SiriusXM Connect Tuner.

- Check that your tuner is securely plugged into the back of the radio
- Check the wires between your unit and the SiriusXM tuner for damage
- Check the tuner to insure that it is not damaged

CHEK ANT (Check Antenna)

This message indicates an issue with your SiriusXM antenna connection.

- Check that your SiriusXM antenna is plugged into the tuner and that the connection is secure
- Check that the SiriusXM antenna is not damaged
- If the antenna connections are secure and the advisory message is still displayed, turn the radio off and back on to reset the advisory message

BUSY (No Signal)

This message indicates that your SiriusXM tuner is acquiring the audio or program information from the satellite. If this message does not go away after a few seconds, the satellite signal is too weak at your current location. To solve this issue:

- Make sure the antenna is mounted away from metal objects
- Move the vehicle to a new location – especially if your vehicle is parked underground or in a parking garage

CH UNAVL (Channel Unavailable)

This message indicates that the current channel is unavailable.
This can happen for a number of reasons:

- The channel may no longer be available on SiriusXM
- The channel may not be available with your current SiriusXM subscription package

CH LOCKED (Mature Channel Locked)

This message indicates that the channel has been locked by the Mature Channel Lock.

- Tune to a channel that is not locked by the Mature Channel Lock
- Disable the Mature Channel Lock (see page 33 for instructions)

Copyright © 2018 Retro Manufacturing, LLC

TROUBLESHOOTING

Problem	Possible Cause	Action to Solve Problem
Radio will not turn on (no lights, no sound)	12 volt Batt+ wire not connected or incorrect voltage	Check all connections for proper voltage with a volt meter. Voltage range: 12-15 volts
	+12 volt accessory wire not connected or incorrect voltage	Check +12 volt accessory wire connection
	Ground wire not connected	Check ground connection
	Fuse on Batt+ is blown	Replace blown fuse
No sound heard from unit but unit lights up	Volume turned all the way down	Increase radio volume
	Internal amp in protection mode	Check speaker leads for any grounded or shorted wires
	Wrong source mode selected	Make sure the unit is in the desired source mode (RADIO, AUX 1, AUX 2, USB 1, USB 2, BT AUDIO, SIRIUSXM)
Unit blows fuses	Possible short in wiring	Incorrect fuse used, make sure only fuses with correct 15 amp ratings are used and check all wiring connections for possible short
	Battery hooked up backwards	Make sure battery is properly connected
USB Error	Invalid media / device type	Ensure that the file format and device is acceptable for playback

System Reset

To restore/reset the unit to factory defaults, remove all power from the unit, wait at least 2 minutes and then reconnect power. Resetting your unit will not remove your station presets but will reset the clock.

Do your radios work on 6 volt systems or on positive ground systems?

No. Our radios are 12 volt, negative ground only. After-market converters and inverters are available but must have at least 10 amps of continuous output.

I'm having problems getting the radio to turn on.

RetroSound® radios require 12 volts to both power leads. The red lead (+12 volt accessory) goes to a switched power source, and the yellow to a constant +12 volt power source. Using a volt meter, check the voltage when the key is turned from "off" to "on". If there is a significant drop in the voltage, the circuit the yellow lead is attached to cannot handle the additional draw of the radio. You will need to find another circuit that can handle the additional draw of the radio, or you will need to go directly to the battery.

What speaker wire do you recommend I use?

We recommend using 16 gauge wire for the speakers.

I have all 4 speakers connected to your radio and the display is lit up like it is working, but there's no sound coming out.

This usually indicates one of two things:

- Speaker wires touching each other or the vehicle chassis at some point. Check each speaker lead from radio to speaker.
- Speaker impedance below 4 ohms. Older speakers are usually not compatible with modern electronics.

A full line of compatible speakers are available on our website www.retromanufacturing.com.

Copyright © 2018 Retro Manufacturing, LLC

My car originally came with a switch to control my automatic antenna. Can I use the RetroSound® radio's remote antenna wire to control my antenna?

No you cannot. Your factory antenna is known as "semi-automatic." It requires a switch to either extend or retract the antenna. You must retain this switch to control your antenna; the RetroSound® radio's power antenna wire is for more modern "fully-automatic" antennas not requiring a separate switch. Compatible fully-automatic antennas are available on our website www.retromanufacturing.com.

The sound output is all mid-range, with very little bass and a strangled-sounding upper range. What is wrong?

One of your speaker wires is connected backwards. This is called being "out of phase." Check to make sure positive is wired to positive and negative to negative on all your speakers.

Will cutting or bending the InfiniMount brackets void the warranty or harm the unit?

No. The RetroSound® patented InfiniMount bracket system has been designed specifically to be bent, cut and modified to simplify radio installation. Modification to the radio's brackets is actually encouraged to ensure proper fit.

If you have questions about modifying the bracket system, you can contact us at tech@retromanufacturing.com or call us at 888.325.1555.

How much should I tighten the shaft nuts when installing the brackets and mounting the radio to the dash?

Gently snug them down. **DO NOT OVERTIGHTEN** the shaft nuts. The shaft nuts are **NOT** the only means of securing the radio to the dash. There is a backstrap included which works with the shaft nuts to secure the radio to the dash. Please note that overtightening the shaft nuts could break the shafts. Retro Manufacturing, LLC will not be responsible for broken shafts due to overtightening of the shaft nuts.

I have your radio with an amp connected, but hear a whining/buzzing sound through the speakers when I step on the accelerator.

If you have an external amplifier installed and experience a high-pitched noise that varies with the engine's RPM, there are many possible solutions:

- Make sure the amplifier's gain controls are not turned all the way up. Amplifiers amplify everything, including noise.
- Try grounding the amplifier near where it is installed.
- Try a filter on the amplifier's 12 volt power lead. Make sure to use a filter that includes a ground wire.
- On rare occasions, noise can be introduced through the antenna lead. If disconnecting the antenna makes the noise go away, you need to replace or repair the antenna plug where it goes into the radio.

When I plug in my flash drive the screen says USB ERR, and it won't play the files I placed on the drive.

- Make sure the files on the drive are .mp3 or unprotected .wma (Windows Media Audio) files. iTunes files are .m4a format and need to be converted to .mp3 format, which can easily be done using iTunes.
- Verify the capacity of the flash drive. Motor 4 will play 1 gig to 32 gig flash drives.
- Make sure the flash drive is not NTFS formatted. Always use the FAT32 format (most drives are formatted with FAT32 from the factory). Be sure to do a full format rather than a quick format, and check that none of the files or folders have names longer than 64 characters. It is very important that none of the audio files have DRM. Use only MP3 files or unprotected Windows Media format files.

Copyright © 2018 Retro Manufacturing, LLC

SPECIFICATIONS

FM

Tuning Range (USA, EUR, AUS, JAP, RUS tuning capable) with RDS	87.5-107.9MHz
Antenna Terminal	External Antenna Connector
Usable Sensitivity	12.5 dBf
Selectivity	75 dB @ 400kHz
Signal to Noise Ratio	62 dB (stereo), 67 dB (mono)
Harmonic Distortion @ 1 kHz	0.8% (stereo), 0.5% (mono)
Separation	32 dB @ 1kHz
Frequency Response	30-16,000 Hz

AM (EU and US Tuning Capable)

Tuning Range (USA, EUR, AUS, JAP, RUS tuning capable)	530-1710 kHz
Antenna Terminal	External Antenna Connector

General

Dimensions (radio face & push-buttons only)	3.5"W x 1.5" H x 1.05" D
Dimensions (radio body)	3.96"W x 1.98"H x 4.30"D
Power Requirements	10.5-14.4 volts
Current Consumption (during operation)	Max. 15A
Current Consumption (car off)	<3.5 mA
Output Power (@ 14.4 volts @ 4 ohm @ 1% THD)	25x4 watts RMS / 45x4 watts Max Power
Output Impedance	4ohm
Low Level Output (4 channels)	2.85 volts
EROM	Non-Volatile Memory
AUX 1 Input	>300 mV / 6 kΩ
AUX 2 Input	>300 mV / 6 kΩ
USB 1 Input	5V (USB female input)
USB 2 Input	5V (USB female input)

NOTE: All specifications are subject to change without notice.

Limited Warranty

If your unit does not work properly because of defects in materials or workmanship, Retro Manufacturing, LLC (collectively referred to as "the warranter") will for the length of the period indicated in the chart below at its option either (a) repair your unit with new or refurbished parts, or (b) replace it with a new or refurbished unit. The warranty period starts with the date of original purchase. The decision to repair or replace will be made by the warranter.

CATEGORIES	WARRANTY
Motor 4 Radio	Two (2) Years

During the warranty period, there will be no charge for parts. You must mail in your unit prepaid during the warranty period. This warranty only applies to products purchased and serviced in the United States or Puerto Rico. This warranty is extended only to the original purchaser of a new product which was not sold "as is.".

To handle a warranty issue, contact us at tech@retromanufacturing.com or 888.325.1555 for a Return Authorization (RA) number. All returns and warranty issues must be accompanied by a Return Authorization number. Any product received without a RA number will be refused. For warranty outside of the United States, please contact the reseller where the product was purchased or email us at Tech@retromanufacturing.com . A purchase receipt or other proof of the original purchase date is required for warranty service.

LIMITED WARRANTY-LIMITS AND EXCLUSIONS

This warranty ONLY COVERS failures due to defects in materials or workmanship, and DOES NOT COVER normal wear and tear or cosmetic damage. The warranty ALSO DOES NOT COVER damages which occurred during shipment, failures which are caused by products not supplied by the warranter, failures which result from accident, misuse, abuse, neglect, bug infestation, mishandling, misapplication, alteration, faulty installation, set-up adjustment, maladjustment of consumer control, improper maintenance, improper antenna, inadequate signal reception or pickup, power line surge, improper voltage supply, lightning, modification, commercial use (such as use in hotels, offices, restaurants, or other business uses) or rental use of the product, or service by anyone other than Retro Manufacturing, LLC, or damage that is attributable to acts of God.

THERE ARE NO EXPRESS WARRANTIES EXCEPT AS LISTED UNDER "LIMITED WARRANTY". THE WARRANTER IS NOT LIABLE FOR INCIDENTAL OR CONSEQUENTIAL DAMAGES RESULTING FROM THE USE OF THIS UNIT, OR ARISING OUT OF ANY BREACH OF THIS WARRANTY. (As examples, this excludes damages for lost time, cost of having someone remove or re-install an installed unit if applicable, travel to and from the servicer, and loss of media, data or other memory contents. The items listed are not exclusive, but are for illustration only.) ALL EXPRESS AND IMPLIED WARRANTIES, INCLUDING THE WARRANTY OF MERCHANTABILITY, ARE LIMITED TO THE PERIOD OF THE LIMITED WARRANTY.

Some states do not allow the exclusion or limitation of incidental or consequential damages, or limitations on how long an implied warranty lasts, so the exclusions may not apply to you. This warranty gives you specific legal rights and you may also have other rights which vary from state to state. If a problem with this unit develops during or after the warranty period, you may contact your dealer or Retro Manufacturing, LLC.

Copyright © 2018 Retro Manufacturing, LLC

Replacement Parts

We also make speakers, kick-panels, amplifiers, antennas and accessories. See our full line of products at www.retromanufacturing.com.

If you need replacement parts visit our website or contact us at sales@retromanufacturing.com or call 888.325.1555

(See "What's in the Box" on page 4 to confirm the part(s) needed).

NOTE: If you return a radio to us for credit, any missing parts will be debited.

Replaceable Items

- Main Wiring Harness
- Power Wiring Harness
- Speaker Wiring Harness
- Metal Backstrap
- Metal Hardware Pack
- Plastic Washer Kit
- Shafts
- InfiniMount Brackets (pair)
- Bezel / Faceplate
- Knobs

Purchase Notes

Record the place and date of purchase for future reference.

Model No.....

Serial No.....

Purchase Date.....

Purchased From.....

Keep this information and your sales receipt in a safe place.

INSTALLATION NOTES

Copyright © 2018 Retro Manufacturing, LLC

MODERN SOUND FOR YOUR CLASSIC

Retro Manufacturing, LLC, 7470 Commercial Way, Henderson, NV 89011
p) 888.325.1555 | f) 702.483.2229 | www.retromanufacturing.com